尔 泰 科 技
ET TECHNOLOGY

PRODUCT SPECIFICATION
FOR LCD MODULE

MODULE NO. : ET-G320240B
REVERSION : V3
TYPE : COB

Customer Approval:

PREPARED BY		DATE	
CHECKED BY		DATE	
APPROVED BY		DATE	

DOCUMENT REVISION HISTORY

VERSION	DATE	DESCRIPTION	CHANGED BY
V1	FEB.25,2008	First issue	YE
V2	APR.18.2009	Add Software Design Guide	Retsen
V3	JUNE.26.2010	Modify specification	Sookey

1. General Specifications

Item	Standard Value	Unit
Number of dots	320(W)X240(H)	dots
Display Pattern	■Dot-Graphic ☐Character ☐Digits ☐with ICON ☐_____	
Module Dimension	139.0(W) X 100.0(H) X 12.5(T)	mm
Viewing Area	103.0(W) X 79.0(H)	mm
Active Area	95.97(W) x 71.97(H)	mm
DOT Size	0.27(W) x 0.27(H)	mm
DOT Pitch	0.30(W) x 0.30(H)	mm
LCD Type	☐ TN,Positive ☐ TN, Negative ☐ HTN, Positive ☐ HTN, Negative ☐ STN, Yellow-Green ☐ STN, Gray ☐ STN, Blue ☐ FSTN, Positive ☐ FSTN, Negative ☐ Color STN ☐ FM LCD	
Polarizer Type	☐Transmissive ☐Reflective ☐Transflective ☐Anti-Glare	
View Direction	☐ 6H ☐ 12H ☐_____	
Operation Voltage	☐3.0(3.3) ☐5.0 ☐_____	V
DC-DC Converter	☐Build-in ☐External	
LCD Controller IC	☐Build-in (RA8835) ☐ not Build-in	
LCD Driver IC	NT7086PQ	
LCD Driving Method	1/240duty, 1/17bias	
Interface Type	☐6800 ☐ 8080 ☐ I2C ☐ Serial ☐ SPI	
Backlight Type	☐ LED ☐ CCFL ☐ EL ☐no Backlight ☐____	
Backlight Color	☐Yellow-Green ☐ White ☐ Amber ☐ Blue ☐ Red ☐_____	
EL/CCFL Driver type	☐ Build-in ☐External	
Touch Panel IC	☐ Build-in ☐ not Build-in	
Touch Panel	☐ Build-in ☐ not Build-in	
Operation Temperature(oC)	-20~70 (TOPL – TOPH)	deg..
Storage Temperature (oC)	-30~80 (TSTL -- TSTH)	deg..

Note: Label "■ " means the option selected.

2. External Dimensions

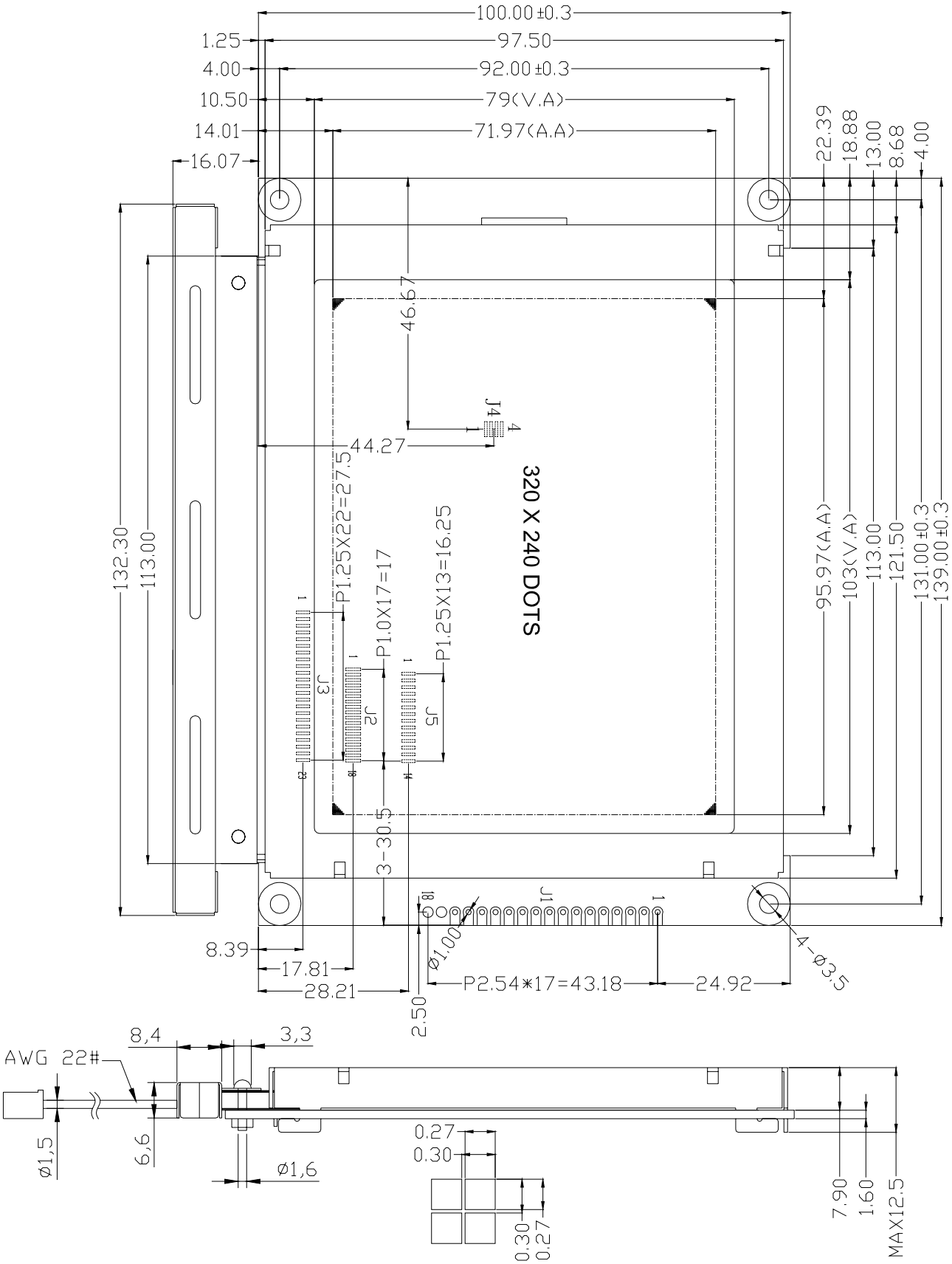

3. Pin Description

3.1 J1(DIP18 , Pitch=2.54mm)

Pin.No	Symbol	Lever	Description
1	VSS	P	GND.
2	VDD	P	Power supply for logic and LCD.
3	VO	P	Operating voltage for LCD.
4	/WR	I	Write signal
5	/RD	I	Read signal
6	/CS	I	Chip select
7	A0	I	Data type select
8	/RST	I	Reset signal(Low effective).
9-16	DB0-DB7	IO	Data bus.
17	LEDA	P	Backlight anode (+5V).
18	LEDK	P	Backlight cathode (+0V).

3.2 J2(SMD18 , Pitch=1.0mm)

Pin.No	Symbol	Lever	Description
1	VSS	P	GND.
2	VDD	P	Power supply for logic and LCD.
3	VO	P	Operating voltage for LCD.
4	A0	I	Data type select
5	/WR	I	Write signal
6	/RD	I	Read signal
7-14	DB0-DB7	IO	Data bus.
15	/CS	I	Chip select
16	/RST	I	Reset signal(Low effective).
17	VEE	P	Negative voltage output to LCD.
18	VSS	P	GND.

3.3 J3(SMD23 , Pitch=1.25mm)

Pin.No	Symbol	Lever	Description
1	VSS	P	GND.
2	VDD	P	Power supply for logic and LCD.
3	VO	P	Operating voltage for LCD.
4	/WR	I	Write signal
5	/RD	I	Read signal
6	/CS	I	Chip select
7	A0	I	Data type select
8	/RST	I	Reset signal(Low effective).
9-16	DB0-DB7	IO	Data bus.

17	LEDA	P	Backlight anode (+5V).
18	LEDK	P	Backlight cathode (+0V).
19	TCLK	I	Touch panel IC External Clock Input.
20	/TCS	I	Touch panel IC Chip Select Input(Low effective).
21	TDI	I	Touch panel IC Serial Data Input.
22	TDO	O	Touch panel IC Serial Data Output.
23	/TINT	O	Touch panel IC Pen Interrupt.

3.4 J4(SMD4 , Pitch=1.0mm)

Pin.No	Symbol	Lever	Description
1	X+	I	Touch panel IC X+ Position Input.
2	Y+	I	Touch panel IC Y+ Position Input.
3	X-	I	Touch panel IC X– Position Input.
4	Y-	I	Touch panel IC Y– Position Input.

3.5 J5(SMD14 , Pitch=1.25mm)

Pin.No	Symbol	Lever	Description
1-4	D0—D3	I	Data Output for Driver.
5	/DISPOFF	I	Power-down Output Signal.
6	FLM	I	Data Pulse Output for Y Drivers.
7	M	I	AC Drive Output.
8	LP	I	Latch Pulse.
9	CP	I	Latch Clock.
10	VDD	P	Power supply for logic and LCD.
11	VSS	P	GND.
12	VEE	P	Negative voltage output to LCD
13	VO	P	Operating voltage for LCD.
14	FGND	P	Frame Ground.

4. Electrical Specifications

4.1 Absolute Maximum Ratings

Parameter	Symbol	Conditions	Min.	Max.	Units
Supply Voltage(Logic)	VDD - VSS	--	- 0.3	7.0	V
Supply Voltage (LCD Drive)	VLCD - VSS	--	0	35.0	V
Input Voltage	VI	--	-0.3	VDD + 0.3	V

4.2 DC Characteristics

Parameter	Symbol	Conditions	Min.	Typ.	Max.	Units
Supply Voltage (Logic)	VDD - VSS	--	4.5	5.0	5.5	V
Supply Voltage (LCD Drive)	VDD - VEE	--	6.0	--	28.0	V
	VDD - VADJ	Shown in 3.1				V
High Level Input Voltage	VIH	--	0.8xVDD	--	VDD	V
Low Level Input Voltage	VIL	--	VSS	--	0.2xVDD	V
High Level Output Voltage	VOH	IOH = -0.5mA	2.4	--	--	V
Supply Current	IDD	VDD = 5.0V	--	20	30	mA
	IEE	VDD = 5.0V	--	3.0	5.0	mA
Frame	fF	Duty = 50%	32	64	128	Hz

4.3 8080 family interface timing

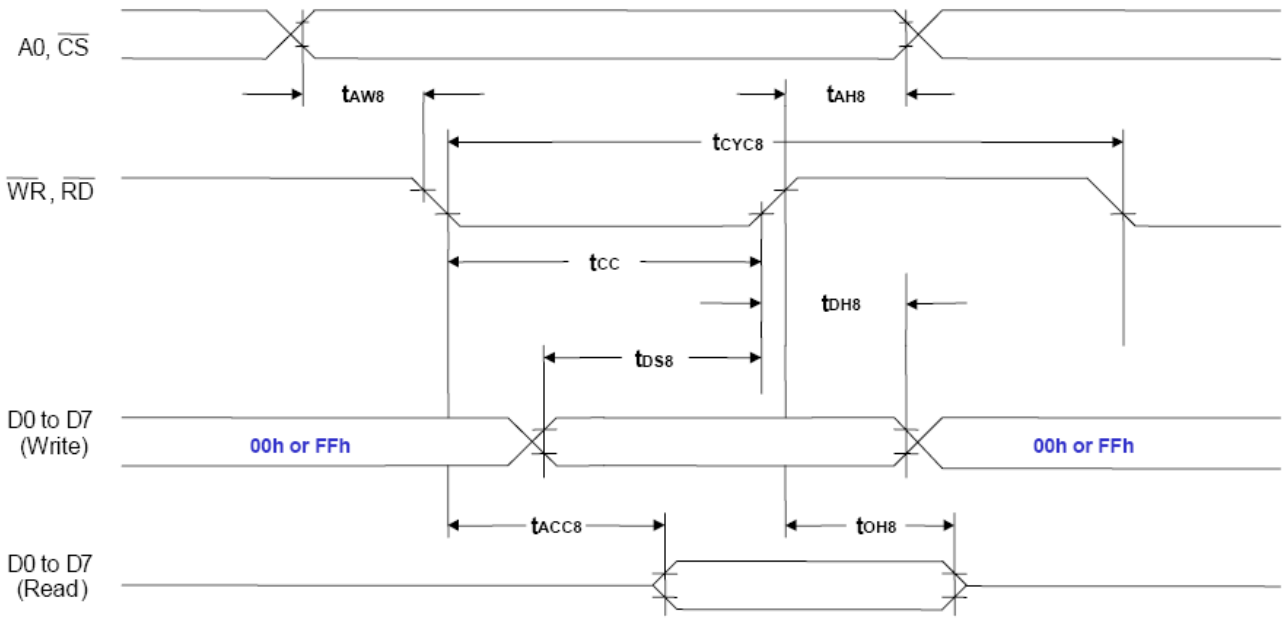

Figure 3-1: 8080 Family Interface Timing

Ta = –20 to 75°C

Signal	Symbol	Parameter	V_{DD} = 4.5 to 5.5V		V_{DD} = 2.7 to 4.5V		Units	Condition
			Min.	Max.	Min.	Max.		
A0,/CS	t_{AH8}	Address hold time	10	--	10	--	ns	CL =100pF
	t_{AW8}	Address setup time	0	--	0	--	ns	
/WR , /RD	t_{CYC8}	System cycle time	note.	--	note.	--	ns	
	t_{CC}	Strobe pulse width	20+tc	--	50+tc	--	ns	
D0 to D7	t_{DS8}	Data setup time	120	--	120	--	ns	
	t_{DH8}	Data hold time	5	--	5	--	ns	
	t_{ACC8}	RD access time	--	50	--	80	ns	

	t_{OH8}	Output disable time	10	50	10	55	ns	

Note: For memory control and system control commands:
$t_{CYC8} = 2t_C + t_{CC} + t_{CEA} + 75 > t_{ACV} + 245$
For all other commands:
$t_{CYC8} = 4t_C + t_{CC} + 30$

4.4 6800 Family Interface Timing

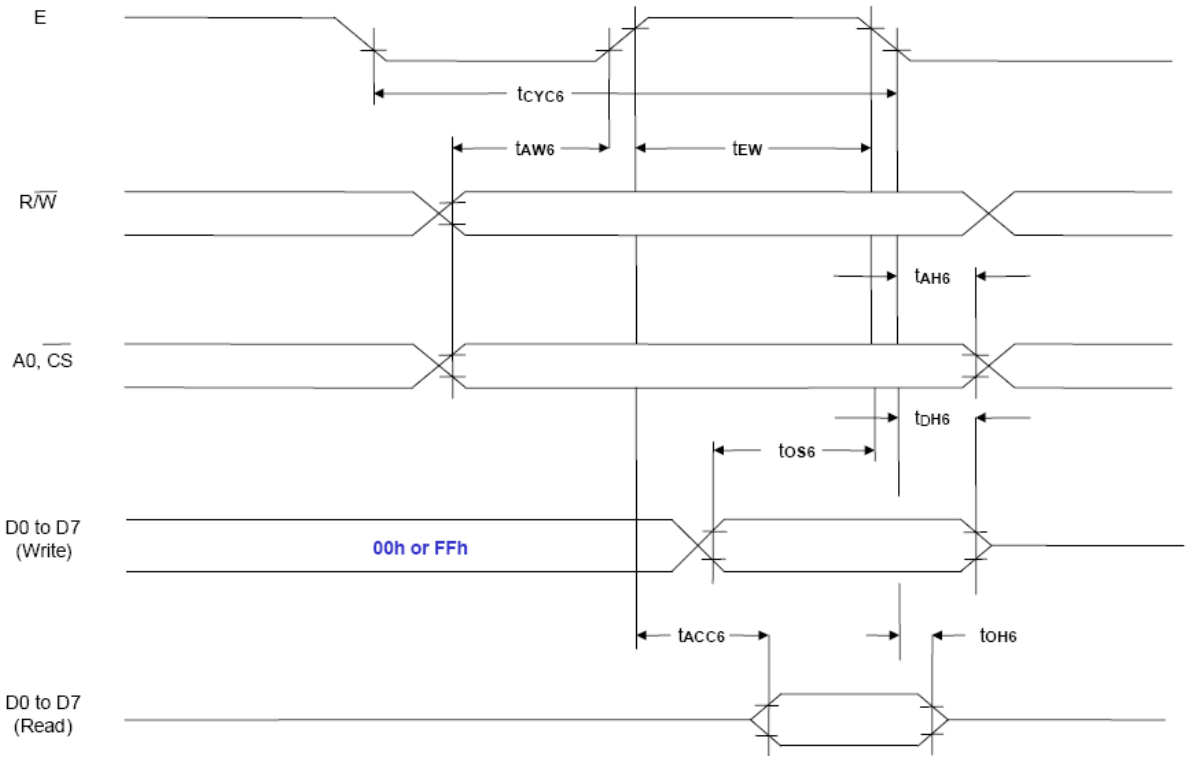

Figure 3-2: 6800 Family Interface Timing

Ta = –20 to 75°C

Signal	Symbol	Parameter	V_{DD} = 4.5 to 5.5V		V_{DD} = 2.7 to 4.5		Units	Condition
			Min.	Max.	Min.	Max.		
A0, /CS,R/W	t_{CYC6}	System cycle time	note.	--	note.	--	ns	CL =100pF
	t_{AW6}	Address hold time	0	--	0	--	ns	
	t_{AH6}	Address setup time	0	--	10	--	ns	
E	t_{EW}	Enable pulse width	20+tc	--	50+tc	--	ns	
D0 to D7	t_{DS6}	Data setup time	100	--	120	--	ns	
	t_{DH6}	Data hold time	0	--	0	--	ns	
	t_{OH6}	Output disable time	10	50	10	75	ns	
	t_{ACC6}	Access time	--	85	--	130	ns	

5. Instruction Table

Class	Command	Code											Hex	Command Description	Command Read Class Command Parameters No. of Bytes
		RD	WR	A0	D7	D6	D5	D4	D3	D2	D1	D0			
System Control	**SYSTEM SET**	1	0	1	0	1	0	0	0	0	0	0	40	Initialize device and display	8
	SLEEP IN	1	0	1	0	1	0	1	0	0	1	1	53	Enter standby mode	0
Display Control	**DISPLAY ON/OFF**	1	0	1	0	1	0	1	1	0	0	D	58, 59	Enable and disable display and display flashing	1
	SCROLL	1	0	1	0	1	0	0	0	1	0	0	44	Set display start address and display regions	10
	CSRFORM	1	0	1	0	1	0	1	1	1	0	1	5D	Set cursor type	2
	CGRAM ADR	1	0	1	0	1	0	1	1	1	0	0	5C	Set start address of character generator RAM	2
	CSRDIR	1	0	1	0	1	0	0	1	1	CD 1	CD 0	4C to 4F	Set direction of cursor movement	0
	HDOT SCR	1	0	1	0	1	0	1	1	0	1	0	5A	Set horizontal scroll position	1
	OVLAY	1	0	1	0	1	0	1	1	0	1	1	5B	Set display overlay format	1
Drawing Control	**CSRW**	1	0	1	0	1	0	0	0	1	1	0	46	Set cursor address	2
	CSRR	1	0	1	0	1	0	0	0	1	1	1	47	Read cursor address	2
Memory Control	**MWRITE**	1	0	1	0	1	0	0	0	0	1	0	42	Write to display memory	-
	MREAD	1	0	1	0	1	0	0	0	0	1	1	43	Read from display memory	-

Notes:

1. In general, the internal registers of the RA8835 series are modified as each command parameter is input. However, the microprocessor does not have to set all the parameters of a command and may send a new command before all parameters have been input. The internal registers for the parameters that have been input will have been changed but the remaining parameter registers are unchanged. 2-byte parameters (where two bytes are treated as 1 data item) are handled as follows:
   a. CSRW, CSRR: Each byte is processed individually. The microprocessor may read or write just the low byte of the cursor address.
   b. SYSTEM SET, SCROLL, CGRAM ADR: Both parameter bytes are processed together. If the command is changed after half of the parameter has been input, the single byte is ignored.
2. APL and APH are 2-byte parameters, but are treated as two 1-byte parameters.

6. System Control Commands

6.1 SYSTEM SET

Initializes the device, sets the window sizes, and selects the LCD interface format. Since this command sets the basic operating parameters of the RA8835 series, an incorrect SYSTEM SET command may cause other commands to operate incorrectly.

	MSB D7	D6	D5	D4	D3	D2	D1	LSB D0	A0	$\overline{WR}$	$\overline{RD}$
C	0	1	0	0	0	0	0	0	1	0	1
P1	0	0	IV	1	W/S	M2	M1	M0	0	0	1
P2	WF	0	0	0	0	FX			0	0	1
P3	0	0	0	0	FY				0	0	1
P4	C/R								0	0	1
P5	TC/R								0	0	1
P6	L/F								0	0	1
P7	APL								0	0	1
P8	APH								0	0	1

Figure 5-1: SYSTEM SET Instruction

6.1.1 C

This control byte performs the following:

1. Resets the internal timing generator
2. Disables the display
3. Cancels sleep mode

Parameters following P1 are not needed if only canceling sleep mode.

6.1.2 MO

Select the internal or external character generator ROM. The internal character generator ROM contains 160, 5 X 7 pixel characters, as shown in RA8835 Version 2.0 Specification Figure 8-14. These characters are fixed at fabrication by the metallization mask. The external character generator ROM, on the other hand, can contain up to 256 user-defined characters.

M0 = 0: Internal CG ROM
M0 = 1: External CG ROM

Note that if the CG ROM address space overlaps the display memory address space, that portion of the display memory cannot be written to.

6.1.3 M1

Select the memory configuration for user-definable characters. The CG RAM codes select one of the 64 codes shown in RA8835 Version 2.0 Specification figure 7-29.

M1 = 0: No D6 correction.
The CG RAM1 and CG RAM2 address spaces are not contiguous, the CG RAM1 address space is treated as character generator RAM, and the CG RAM2 address space is treated as character generator ROM.

M1 = 1: D6 correction.
The CG RAM1 and CG RAM2 address spaces are contiguous and are both treated as character generator RAM.

6.1.4 M2

Select the height of the character bitmaps. Characters more than 16 pixels high can be displayed by creating a bitmap for each portion of each character and using the RA8835 series graphics mode to reposition them.

M2 = 0: 8-pixel character height (2716 or equivalent ROM)
M2 = 1: 16-pixel character height (2732 or equivalent ROM)

6.1.5 W/S

Select the LCD drive method.

W/S = 0: Single-panel drive
W/S = 1: Dual-panel drive

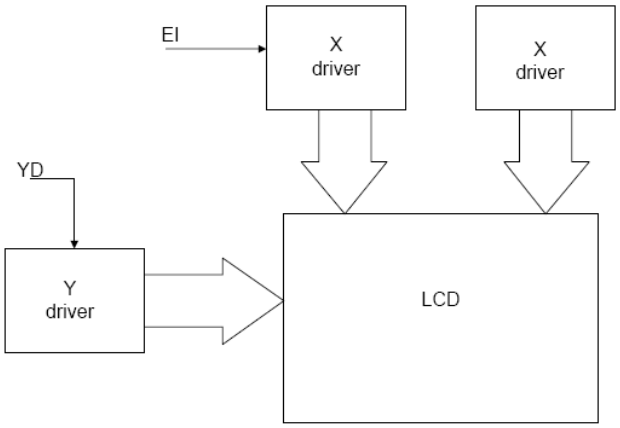

Figure 5-2: Single-panel Display

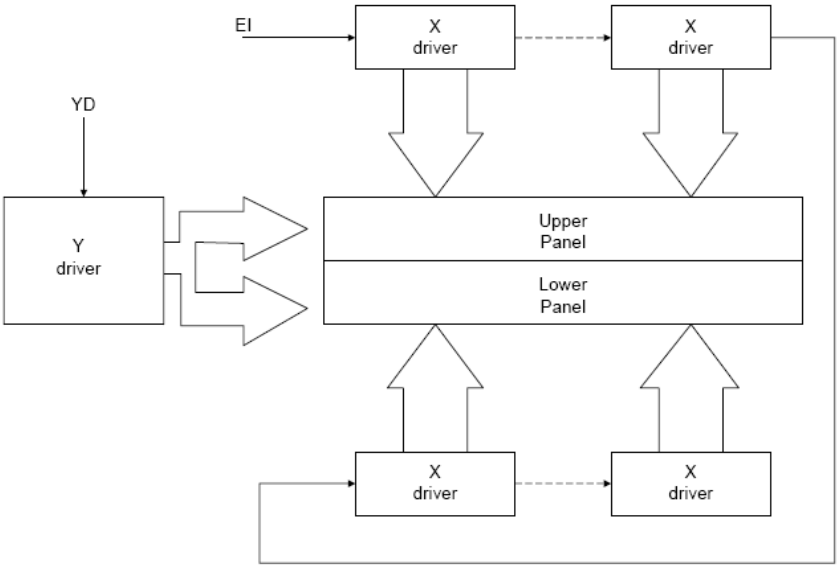

Figure 5-3: Above and Below Two-panel Display

6.1.6 IV

Screen origin compensation for inverse display. IV is usually set to 1. The best way of displaying inverted characters is to Exclusive-OR the text layer with the graphics background layer. However, inverted characters at the top or left of the screen are difficult to read as the character origin is at the top-left of its bitmap and there are no background pixels either above or to the left of these characters. The IV flag causes the RA8835 series to offset the text screen against the graphics back layer by one vertical pixel. Use the horizontal pixel scroll function (HDOT SCR) to shift the text screen 1 to 7 pixels to the right. All characters will then have the necessary surrounding background pixels that ensure easy reading of the inverted characters.

IV = 0: Screen top-line correction
IV = 1: No screen top-line correction

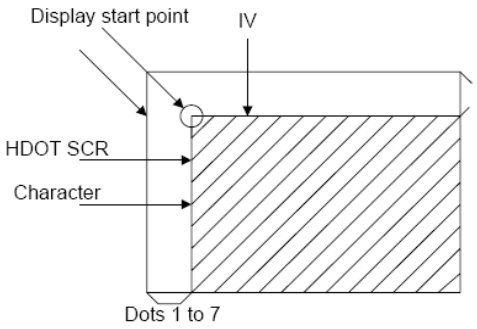

Figure 5-5: IV and HDOT SCR Adjustment

6.1.7 FX

Define the horizontal character size. The character width in pixels is equal to FX + 1, where FX can range from 00 to 07H inclusive. In RA8835, the [FX] character width(pixels) is from 1~8 only. The data bit 3 is reserved.

Table-3: Horizontal Character Size Selection

FX					[FX] character width (pixels)
HEX	D 3	D 2	D 1	D 0	
00	0	0	0	0	1
01	0	0	0	1	2
↓	↓	↓	↓	↓	↓
07	0	1	1	1	8

6.1.8 WF

Select the AC frame drive waveform period. WF is usually set to 1.
WF = 0: 16-line AC drive
WF = 1: two-frame AC drive
In two-frame AC drive, the WF period is twice the frame period. In 16-line AC drive, WF inverts every 16 lines. Although 16-line AC drive gives a more readable display, horizontal lines may appear when using high LCD drive voltages or at high viewing angles.

6.1.9 FY

Set the vertical character size. The height in pixels is equal to FY + 1. FY can range from 00 to 0FH inclusive. Set FY to zero (vertical size equals one) when in graphics mode.

Table-4: Vertical Character Size Selection

FY					[FY] character height (pixels)
HEX	D 3	D 2	D 1	D 0	
00	0	0	0	0	1
01	0	0	0	1	2
↓	↓	↓	↓	↓	↓
07	0	1	1	1	8
↓	↓	↓	↓	↓	↓
0E	1	1	1	0	15
0F	1	1	1	1	16

6.1.10 C/R

Set the address range covered by one display line, that is, the number of characters less one, multiplied by the number of horizontal bytes per character. C/R can range from 0 to 239. For example, if the character width is 10 pixels, then the address range is equal to twice the
number of characters, less 2. [C/R] cannot be set to a value greater than the address range. It can, however, be set smaller than the address range, in which case the excess display area is blank. The number of excess pixels must not exceed 64.

Table-5: Display Line Address Range

C/R									[C/R] bytes per display line
HEX	D7	D6	D5	D4	D3	D2	D1	D0	
00	0	0	0	0	0	0	0	0	1
01	0	0	0	0	0	0	0	1	2
↓	↓	↓	↓	↓	↓	↓	↓	↓	↓
4F	0	1	0	0	1	1	1	1	80
↓	↓	↓	↓	↓	↓	↓	↓	↓	↓
EE	1	1	1	0	1	1	1	0	239
EF	1	1	1	0	1	1	1	1	240

6.1.11 TC/R

Set the length, including horizontal blanking, of one line. The line length is equal to TC/R + 1, where TC/ R can range from 0 to 255. TC/R must be greater than or equal to C/R + 4. Provided this condition is satisfied, [TC/R] can be set according to the equation given in section 17-1-1 in order to hold the frame period constant and minimize jitter for any given main oscillator frequency, f_{osc}.

Table-6: Line Length Selection

TC/R									[TC/R] line length (bytes)
HEX	D7	D6	D5	D4	D3	D2	D1	D0	
00	0	0	0	0	0	0	0	0	1
01	0	0	0	0	0	0	0	1	2
↓	↓	↓	↓	↓	↓	↓	↓	↓	↓
52	0	1	0	1	0	0	1	0	83
↓	↓	↓	↓	↓	↓	↓	↓	↓	↓
FE	1	1	1	1	1	1	1	0	255
FF	1	1	1	1	1	1	1	1	256

6.1.12 L/F

Set the height, in lines, of a frame. The height in lines is equal to L/F + 1, where L/F can range from 0 to 255.

Table-7: Frame Height Selection

L/F									[L/F] lines per frame
HEX	D7	D6	D5	D4	D3	D2	D1	D0	
00	0	0	0	0	0	0	0	0	1
01	0	0	0	0	0	0	0	1	2
↓	↓	↓	↓	↓	↓	↓	↓	↓	↓
7F	0	1	1	1	1	1	1	1	128
↓	↓	↓	↓	↓	↓	↓	↓	↓	↓
FE	1	1	1	1	1	1	1	0	255
FF	1	1	1	1	1	1	1	1	256

6.1.13 AP

Define the horizontal address range of the virtual screen. APL is the least significant byte of the address.

APL	AP7	AP6	AP5	AP4	AP3	AP2	AP1	AP0
APH	AP15	AP14	AP13	AP12	AP11	AP10	AP9	AP8

Figure 5-7: AP Parameters

Table-8: Horizontal Address Range

Hex code				[AP] addresses per line
APH		APL		
0	0	0	0	0
0	0	0	1	1
↓	↓	↓	↓	↓
0	0	5	0	80
↓	↓	↓	↓	↓
F	F	F	E	$2^{16}-2$
F	F	F	F	$2^{16}-1$

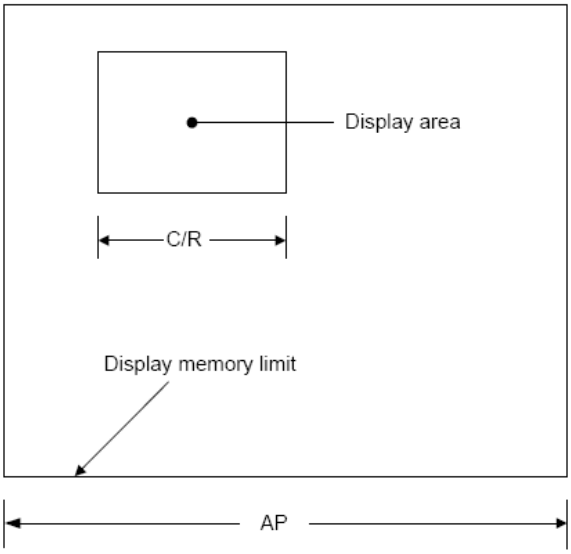

Figure 5-8: AP and C/R Relationship

6.2 SLEEP IN

Place the system in standby mode. This command has no parameter bytes. At least one blank frame after receiving this command, the RA8835 halts all internal operations, including the oscillator, and enters the sleep state. Blank data is sent to the X-drivers, and the Y-drivers have their bias supplies turned off by the YDIS signal. Using the YDIS signal to disable the Y-drivers guards against any spurious displays. The internal registers of the RA8835 series maintain their values during the sleep state. The display memory control pins maintain their logic levels to ensure that the display memory is not corrupted. The RA8835 series can be removed from the sleep state by sending the SYSTEM SET command with only the P1 parameter. The DISP ON command should be sent next to enable the display.

	MSB							LSB
C	0	1	0	1	0	0	1	1

Figure 5-9: SLEEP IN Instruction

1. The YDIS signal goes LOW between one and two frames after the SLEEP IN command is received. Since YDIS forces all display driver outputs to go to the deselected output voltage, YDIS can be used as a power-down signal for the LCD unit. This can be done by having YDIS turn off the relatively high power LCD drive supplies at the same time as it blanks the display.
2. Since all internal clocks in the RA8835 series are halted while in the sleep state, a DC voltage will be applied to the LCD panel if the LCD drive supplies remain on. If reliability is a prime consideration, turn off the LCD drive supplies before issuing the SLEEP IN command.
3. Note that, although the bus lines become high impedance in the sleep state, pull-up or pulldown resistors on the bus will force these lines to a known state.

6.3 Display Control Commands

6.3.1 DISP ON/OFF

Turn the whole display on or off. The single-byte parameter enables and disables the cursor and layered screens, and sets the cursor and screen flash rates. The cursor can be set to flash over one character or over a whole line.

	MSB							LSB
C	0	1	0	1	1	0	0	D
P1	FP5	FP4	FP3	FP2	FP1	FP0	FC1	FC0

Figure 5-10: DISP ON/OFF Parameters

6.3.1.1 D

Turn the display ON or OFF. The D bit takes precedence over the FP bits in the parameter.
D = 0: Display OFF
D = 1: Display ON

6.3.1.2 FC

Enables/disables the cursor and sets the flash rate. The cursor flashes with a 70% duty cycle (ON/OFF).

Table-9: Cursor Flash Rate Selection

FC1	FC0	Cursor display	
0	0	OFF (blank)	
0	1	ON	No flashing
1	0		Flash at f_{FR}/32 Hz (approx. 2 Hz)
1	1		Flash at f_{FR}/64 Hz (approx. 1 Hz)

Note: As the MWRITE command always enables the cursor, the cursor position can be checked even when performing consecutive writes to display memory while the cursor is flashing.

6.3.1.3 FP

Each pair of bits in FP sets the attributes of one screen block, as follows. The display attributes are as follows:

Table-10: Screen Block Attribute Selection

FP1	FP0	First screen block (SAD1)	
FP3	FP2	Second screen block (SAD2, SAD4). See note.	
FP5	FP4	Third screen block (SAD3)	
0	0	OFF (blank)	
0	1	ON	No flashing
1	0		Flash at f_{FR}/32 Hz (approx. 2 Hz)
1	1		Flash at f_{FR}/4 Hz (approx. 16 Hz)

Note: If SAD4 is enabled by setting W/S to 1, FP3 and FP2 control both SAD2 and SAD4. The attributes of SAD2 and SAD4 cannot be set independently.

6.3.2 SCROLL

6.3.2.1 C

Set the scroll start address and the number of lines per scroll block. Parameters P1 to P10 can be omitted if not required. The parameters must be entered sequentially as shown in Figure 5-11.

	MSB							LSB	
C	0	1	0	0	0	1	0	0	
P1	A7	A6	A5	A4	A3	A2	A1	A0	(SAD 1L)
P2	A15	A14	A13	A12	A11	A10	A9	A8	(SAD 1H)
P3	L7	L6	L5	L4	L3	L2	L1	L0	(SL1)
P4	A7	A6	A5	A4	A3	A2	A1	A0	(SAD 2L)
P5	A15	A14	A13	A12	A11	A10	A9	A8	(SAD 2H)
P6	L7	L6	L5	L4	L3	L2	L1	L0	(SL2)
P7	A7	A6	A5	A4	A3	A2	A1	A0	(SAD 3L)
P8	A15	A14	A13	A12	A11	A10	A9	A8	(SAD 3H)
P9	A7	A6	A5	A4	A3	A2	A1	A0	(SAD 4L)
P10	A15	A14	A13	A12	A11	A10	A9	A8	(SAD 4H)

Figure 5-11: SCROLL Instruction Parameters

Note: Set parameters P9 and P10 only if both two-screen drive (W/S = 1) and two-layer configuration are selected. SAD4 is the fourth screen block display start address.

Table-11: Screen Block Start Address Selection

SL1, SL2									[SL] screen lines
HEX	L7	L6	L5	L4	L3	L2	L1	L0	
00	0	0	0	0	0	0	0	0	1
01	0	0	0	0	0	0	0	1	2
↓	↓	↓	↓	↓	↓	↓	↓	↓	↓
7F	0	1	1	1	1	1	1	1	128
↓	↓	↓	↓	↓	↓	↓	↓	↓	↓
FE	1	1	1	1	1	1	1	0	255
FF	1	1	1	1	1	1	1	1	256

6.3.2.2 SL1, SL2

SL1 and SL2 set the number of lines per scrolling screen. The number of lines is SL1 or SL2 plus one. The relationship between SAD, SL and the display mode is described below.

6.3.3 CSRFORM

Set the cursor size and shape. Although the cursor is normally only used in text displays, it may also be used in graphics displays when displaying special characters.

	MSB							LSB
C	0	1	0	1	1	1	0	1
P1	0	0	0	0	CRX X3	X2	X1	X0
P2	CM	0	0	0	CRY Y3	Y2	Y1	Y0

Figure 5-13: CSRFORM Parameter Bytes

6.3.3.1 CRX

Set the horizontal size of the cursor from the character origin. CRX is equal to the cursor size less one. CRX must be less than or equal to FX.

Table-14: Horizontal Cursor Size Selection

CRX					[CRX] cursor width (pixels)
HEX	X3	X2	X1	X0	
0	0	0	0	0	1
1	0	0	0	1	2
↓	↓	↓	↓	↓	↓
4	0	1	0	0	9
↓	↓	↓	↓	↓	↓
E	1	1	1	0	15
F	1	1	1	1	16

6.3.3.2 CRY

Set the location of an underscored cursor in lines, from the character origin. When using a block cursor, CRY sets the vertical size of the cursor from the character origin. CRY is equal to the number of lines less one.

Table-15: Cursor Height Selection

CRY					[CRY] cursor height (lines)
HEX	Y3	Y2	Y1	Y0	
0	0	0	0	0	Illegal
1	0	0	0	1	2
↓	↓	↓	↓	↓	↓
8	1	0	0	0	9
↓	↓	↓	↓	↓	↓
E	1	1	1	0	15
F	1	1	1	1	16

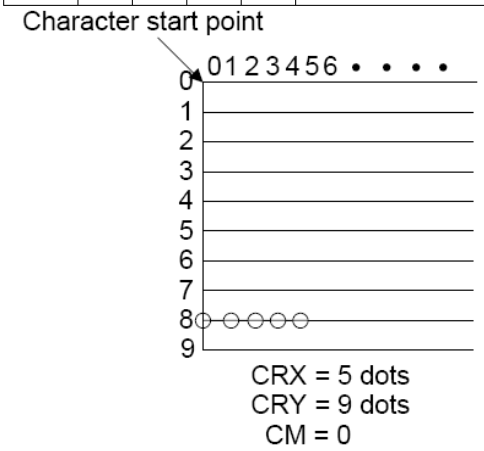

Figure 5-14: Cursor Size and Position

6.3.3.3 CM

Set the cursor shape. Always set CM to 1 when in graphics mode.

CM = 0: Underscore cursor

CM = 1: Block cursor

6.3.4 CSRDIR

Set the direction of automatic cursor increment. The cursor can move left or right one character, or up or down by the number of bytes specified by the address pitch, AP. When reading from and writing to display memory, this automatic cursor increment controls the display memory address increment on each read or write.

	MSB					LSB		
C	0	1	0	0	1	1	CD1	CD2

Figure 5-15: CSRDIR Parameters

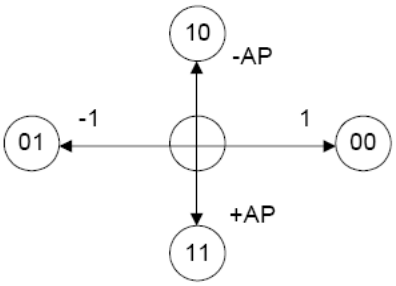

Figure 5-16: Cursor Direction

Table-16: Cursor Shift Direction

C	CD1	CD0	Shift direction
4CH	0	0	Right
4DH	0	1	Left
4EH	1	0	Up
4FH	1	1	Down

Note: Since the cursor moves in address units even if FX ⩾ 9 , the cursor address increment must be preset for movement in character units.

6.3.5 OVLAY

Selects layered screen composition and screen text/ graphics mode.

	MSB							LSB
C	0	1	0	1	1	0	1	1
P1	0	0	0	OV	DM2	DM1	MX1	MX0

Figure 5-17: OVLAY Parameters

6.3.5.1 MX0,MX1

MX0 and MX1 set the layered screen composition method, which can be either OR, AND, Exclusive-OR or Priority-OR. Since the screen composition is organized in layers and not by screen blocks, when using a layer divided into two screen blocks, different composition methods cannot be specified for the individual screen blocks. The Priority-OR mode is the same as the OR mode unless flashing of individual screens is used.

Table-17: Composition Method Selection

MX1	MX0	Function	Composition Method	Applications
0	0	L1 ∪ L2 ∪ L3	OR	Underlining, rules, mixed text and graphics
0	1	(L1 ⊕ L2) ∪ L3	Exclusive-OR	Inverted characters, flashing regions, underlining
1	0	(L1 ∩ L2) ∪ L3	AND	Simple animation, three-dimensional appearance
1	1	L1 > L2 > L3	Priority-OR	

Note:
L1: First layer (text or graphics). If text is selected, layer L3 cannot be used.
L2: Second layer (graphics only)
L3: Third layer (graphics only)

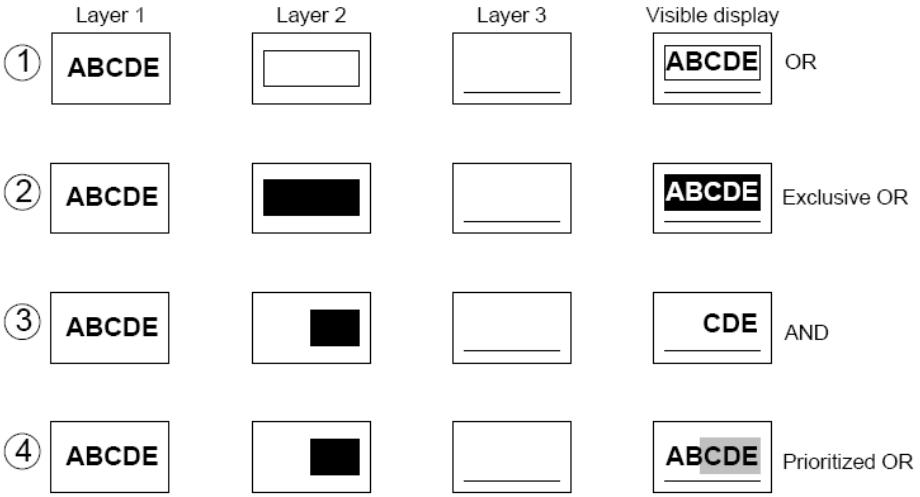

Figure 5-18: Combined Layer Display

Notes:
L1: Not flashing
L2: Flashing at 1 Hz
L3: Flashing at 2 Hz

6.3.5.2 DM1,DM2

DM1 and DM2 specify the display mode of screen blocks 1 and 3, respectively.
DM1/2 = 0: Text mode
DM1/2 = 1: Graphics mode

Note 1: Screen blocks 2 and 4 can only display graphics.
Note 2: DM1 and DM2 must be the same, regardless of the setting of W/S.

6.3.5.3 OV

Specifies two- or three-layer composition in graphics mode.
OV = 0: Two-layer composition
OV = 1: Three-layer composition
Set OV to 0 for mixed text and graphics mode.

6.3.6 CGRAM ADR

Specifies the CG RAM start address.

	MSB							LSB	
C	0	1	0	1	1	1	0	0	
P1	A7	A6	A5	A4	A3	A2	A1	A0	SAGL
P2	A15	A14	A13	A12	A11	A10	A9	A8	SAGH

Figure 5-19: CGRAM ADR Parameters

Note: See section 10 for information on the SAG parameters.

6.3.7 HDOT SCR

While the SCROLL command only allows scrolling by characters, HDOT SCR allows the screen to be scrolled horizontally by pixels. HDOT SCR cannot be used on individual layers.

	MSB							LSB
C	0	1	0	1	1	0	1	0
P1	0	0	0	0	0	D2	D1	D0

Figure 5-20: HDOT SCR Parameters

6.3.7.1 D0-D2

Specifies the number of pixels to scroll. The C/R parameter has to be set to one more than the number of horizontal characters before using HDOT SCR. Smooth scrolling can be simulated if the controlling microprocessor repeatedly issues the HDOT SCR command to the RA8835 series.

Table-18: Scroll Step Selection

P1				Number of pixels to scroll
HEX	D2	D1	D0	
00	0	0	0	0
01	0	0	1	1
02	0	1	0	2
↓	↓	↓	↓	↓
06	1	1	0	6
07	1	1	1	7

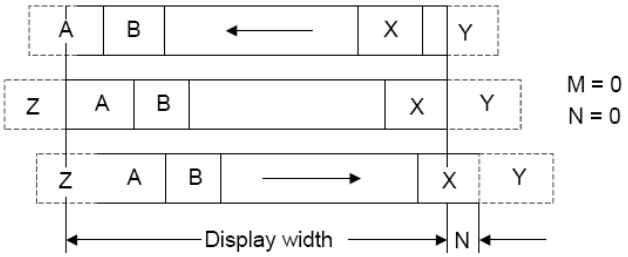

M/N is the number of bits(dots) that parameter 1 (P1) is incremented/decremented by.

Figure 5-21 Horizontal Scrolling

6.4 Drawing Control Commands

6.4.1 CSRW

The 16-bit cursor address register contains the display memory address of the data at the cursor position as shown in Figure 5-22. Note that the microprocessor cannot directly access the display memory. The MREAD and MWRITE commands use the address in this register.

	MSB							LSB	
C	0	1	0	0	0	1	1	0	
P1	A7	A6	A5	A4	A3	A2	A1	A0	(CSRL)
P2	A15	A14	A13	A12	A11	A10	A9	A8	(CSRH)

Figure 5-22: CSRW Parameters

The cursor address register can only be modified by the CSRW command, and by the automatic increment after an MREAD or MWRITE command. It is not affected by display scrolling. If a new address is not set, display memory accesses will be from the last set address or the address after previous automatic increments.

6.4.2 CSRR

Read from the cursor address register. After issuing the command, the data read address is read twice, for the low byte and then the high byte of the register.

	MSB							LSB	
C	0	1	0	0	0	1	1	1	
P1	A7	A6	A5	A4	A3	A2	A1	A0	(CSRL)
P2	A15	A14	A13	A12	A11	A10	A9	A8	(CSRH)

Figure 5-23: CSRR Parameters

6.5 Memory Control Commands

6.5.1 MWRITE

The microprocessor may write a sequence of data bytes to display memory by issuing the MREAD command and then writing the bytes to the RA8835 series. There is no need for further MWRITE commands or for the microprocessor to update the cursor address register after each byte as the cursor address is automatically incremented by the amount set with CSRDIR, in preparation for the next data write.

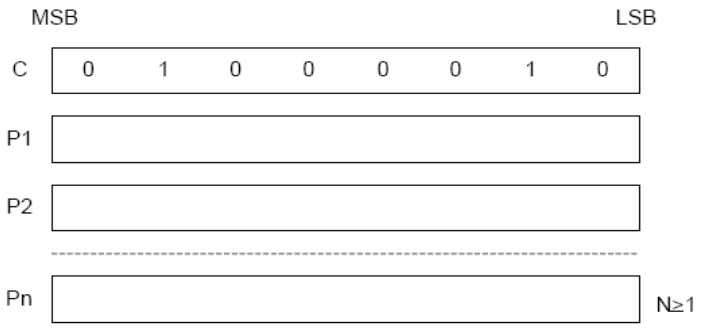

Figure 5-24: MWRITE Parameters

Note: P1, P2, ..., Pn: display data.

6.5.2 MREAD

Put the RA8835 series into the data output state. Each time the microprocessor reads the buffer, the cursor address is incremented by the amount set by CSRDIR and the next data byte fetched from memory, so a sequence of data bytes may be read without further MREAD commands or by updating the cursor address register. If the cursor is displayed, the read data will be from two positions ahead of the cursor.

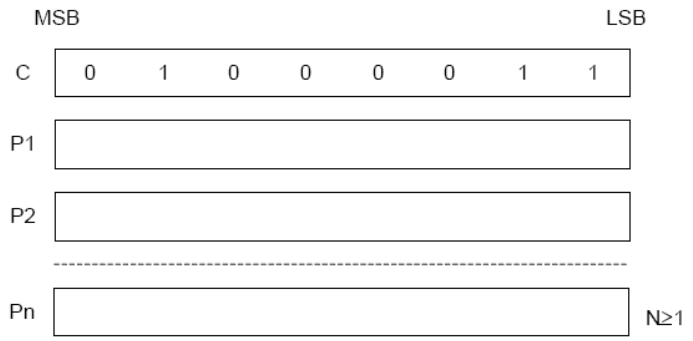

Figure 5-25: MREAD Parameters

7. Software Design Guide

```
// test code for reference
// MCU: W78E516B  8bit 8080 mode
//controler IC: RA8835
#include <reg52.h>
sbit lcd_CS =  P3^0;
sbit lcd_RD =  P3^1;
sbit lcd_WR =  P3^2;
sbit lcd_A0 =  P3^4;
sbit lcd_RES = P3^5;
//sbit lcd_SEL1 =P3^2;
#define  lcd_CMD    P1
#define  lcd_DATA   P1

void lcd_initial(void)
```

```
{
  lcd_cmdwrite(0x40);      //SYSTEM SET,8 parameter
  lcd_datawrite(0x30);     //p1
  lcd_datawrite(0x87);     //p2
  lcd_datawrite(0x07);     //p3
  lcd_datawrite(0x27);     //p4  set 320 dots per row (320/8=40-1)
  lcd_datawrite(0x37);     //p5  set frequency drive LC (about70HZ)
  lcd_datawrite(0xef);     //p6  set 240 dots per line (239=0xef)
  lcd_datawrite(0x28);     //p7   APL
  lcd_datawrite(0x00);     //p8   APH


  lcd_cmdwrite(0x44);      //SCROLL SET,10 parameter
  lcd_datawrite(0x00);     //sa1-L   low 8bit ram address for first layer
  lcd_datawrite(0x00);     //sa1-H   high 8bit ram address for first layer
  lcd_datawrite(0xf0);     //sL1     240dots row for first layer
  lcd_datawrite(0x80);     //sa2-L   low 8bit ram address for second layer
  lcd_datawrite(0x25);     //sa2-H   high 8bit ram address for second layer
  lcd_datawrite(0xf0);     //sL2     240dots row for second layer
  lcd_datawrite(0x00);     //sa3-L   low 8bit ram address for third layer
  lcd_datawrite(0x3a);     //sa3-H   high 8bit ram address for third layer
  lcd_datawrite(0x00);     //sa4-L   low 8bit ram address for forth layer
  lcd_datawrite(0x3a);     //sa4-H   high 8bit ram address for forth layer

  lcd_cmdwrite(0x5a);      //HDOT SCR //must write 0x00 when system initial
  lcd_datawrite(0x00);

  lcd_cmdwrite(0x58);      //DISP OFF
  lcd_datawrite(0x54);

  lcd_cmdwrite(0x5d);      //CSR FORM
  lcd_datawrite(0x00);     //CRX
  lcd_datawrite(0x00);     //CRY

  lcd_cmdwrite(0x59);      //DISP ON
  lcd_datawrite(0x54);

  lcd_cmdwrite(0x5b);      //set overlay mode
  lcd_datawrite(0x00);
}

/*************softwave reset*************/
void lcd_reset(void)
{

   lcd_RES = 1;
   delay1ms(2);
 //  lcd_SEL1 = 0;
   lcd_A0 = 0;
   lcd_WR = 1;
   lcd_RD = 1;
   lcd_CS = 1;
   lcd_RES = 0;
   delay1ms(100);
   lcd_RES = 1;
   delay1ms(500);

}

/***************write command**************/
```

```
void lcd_cmdwrite(unsigned char cmdx)
{
   // lcd_SEL1 = 0;
    lcd_CMD = cmdx;
    lcd_A0 = 1;
    lcd_CS = 0;
    lcd_WR = 0;
    lcd_WR = 1;
    lcd_CS = 1;
   //lcd_A0 = 0;
}
/*************write data**************/
void lcd_datawrite(unsigned char datax)
{
   lcd_chkbusy();

   // lcd_SEL1 = 0;
    lcd_A0 = 0;
    lcd_DATA = datax;
    lcd_CS = 0;
    lcd_WR = 0;
    lcd_WR = 1;
    lcd_CS = 1;
    lcd_A0 = 1;
}
/*********Read state*********/
unsigned char lcd_cmdread(void)
{
    unsigned char address_cmd;
    lcd_DATA=0xff;
  // lcd_SEL1 = 0;
    lcd_A0 = 0;
    lcd_CS = 0;
    lcd_RD = 0;
    address_cmd = lcd_DATA;
    lcd_RD = 1;
    lcd_CS = 1;
    lcd_A0 = 0;
  return(address_cmd);
}

/*******check busy flag**********/
void lcd_chkbusy(void)
{
     unsigned char busy;
 do
 {
    busy =(lcd_cmdread() & 0x40);
     }while(busy);

}

/**********set display address*********/
void lcd_cursorxy(unsigned char x,unsigned char y)
{
   //lcd_chkbusy();
    lcd_cmdwrite(0x46);
    lcd_datawrite(x);
    lcd_datawrite(y);
}
```

```
/****************write text *******************/
void lcd_showtext(unsigned char *text,unsigned int x)
{
   while(*text != '\0')
    {
    lcd_datawrite(*text);
    ++text;
       delay1ms(x);
   }
}
/****************clear display***********************/
void lcd_clear(void)
{
   unsigned int i;
   lcd_cursorxy(0x00,0x00);
   lcd_cmdwrite(0x42);
    for(i=0;i<0x7fff;i++)
      lcd_datawrite(0x00);
}

/*****************display graphic****************************/
void lcd_graphic(void)
{
     lcd_cursorxy(0x80,0x25);      //set address
     lcd_cmdwrite(0x42);           ////MWRITE
    for(i=0;i<9600;i++)         //40(8bit data,40times per line)x240=9600
     lcd_datawrite(PIC[i]);
}

unsigned char code PIC[]={ /*320240graphic code*/ };

/********************display text*************/
void lcd_text(void)
{
   lcd_cursorxy(0x00,0x00);              //first line
   lcd_cmdwrite(0x42);       //MWRITE
   lcd_showbig("SHENZHEN EASTET LTD.",0);

   lcd_cursorxy(0x50,0x00);              //second line
   lcd_cmdwrite(0x42);       //MWRITE
   lcd_showbig("TEL:0755-88834446 Ext:607 ",0);

   lcd_cursorxy(0xa0,0x00);               //third line ...... and so on
   lcd_cmdwrite(0x42);
   lcd_showbig("FAX:0755-88834446",0);

   lcd_cursorxy(0xf0,0x00);
   lcd_cmdwrite(0x42);
   lcd_showbig("Address:",0);

   lcd_cursorxy(0x40,0x01);
   lcd_cmdwrite(0x42);
   lcd_showbig("Shenzhen Futian District dignified industry and trade garden 206 east block 706 room  ",0);

   lcd_cursorxy(0x80,0x02);
   lcd_cmdwrite(0x42);
   lcd_showbig("ASCII:",0);

   lcd_cursorxy(0x93,0x04);
```

```
   lcd_cmdwrite(0x42);
   lcd_showbig("December 11 , 2008 ",0);

   lcd_cursorxy(0xd0,0x02);
    lcd_cmdwrite(0x42);
    for(i=0;i<96;i++)
      lcd_datawrite(0x21+i);   //transter internal character
delay1ms(1000);

}
```

8. Internal Character Generator Font

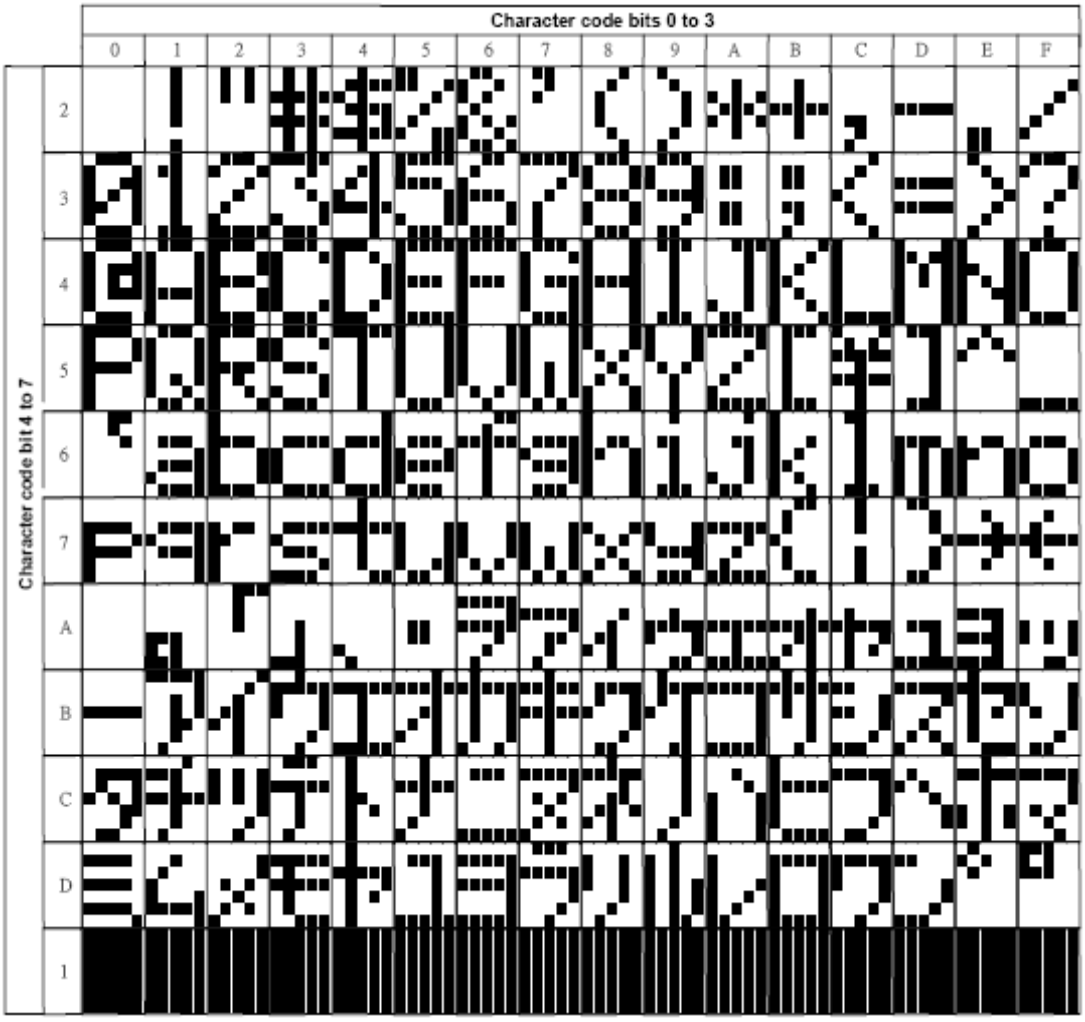

9. PRECAUTIONS FOR USING LCD MODULES

Handing Precautions

(1) The display panel is made of glass. Do not subject it to a mechanical shock by dropping it or impact.

(2) If the display panel is damaged and the liquid crystal substance leaks out, be sure not to get any in your mouth. If the substance contacts your skin or clothes, wash it off using soap and water.

(3) Do not apply excessive force to the display surface or the adjoining areas since this may cause the color tone to vary.

(4) The polarizer covering the display surface of the LCD module is soft and easily scratched. Handle this polarizer carefully.

(5) If the display surface becomes contaminated, breathe on the surface and gently wipe it with a soft dry cloth. If it is heavily contaminated, moisten cloth with one of the following solvents :

- Isopropyl alcohol
- Ethyl alcohol

(6) Solvents other than those above-mentioned may damage the polarizer. Especially, do not use the following.

- Water
- Ketone
- Aromatic solvents

(7) Exercise care to minimize corrosion of the electrode. Corrosion of the electrodes is accelerated by water droplets, moisture condensation or a current flow in a high-humidity environment.

(8) Install the LCD Module by using the mounting holes. When mounting the LCD module make sure it is free of twisting, warping and distortion. In particular, do not forcibly pull or bend the I/O cable or the backlight cable.

(9) Do not attempt to disassemble or process the LCD module.

(10) NC terminal should be open. Do not connect anything.

(11) If the logic circuit power is off, do not apply the input signals.

(12) To prevent destruction of the elements by static electricity, be careful to maintain an optimum work environment.

- Be sure to ground the body when handling the LCD modules.
- Tools required for assembling, such as soldering irons, must be properly grounded.
- To reduce the amount of static electricity generated, do not conduct assembling and other work under dry conditions.
- The LCD module is coated with a film to protect the display surface. Exercise care when peeling off this protective film since static electricity may be generated.

Storage Precautions

When storing the LCD modules, avoid exposure to direct sunlight or to the light of fluorescent lamps. Keep the modules in bags (avoid high temperature / high humidity and low temperatures below 0°C). Whenever possible, the LCD modules should be stored in the same conditions in which they were shipped from our company.

Others

Liquid crystals solidify under low temperature (below the storage temperature range) leading to defective orientation or the generation of air bubbles (black or white). Air bubbles may also be generated if the module is subject to a low temperature.

If the LCD modules have been operating for a long time showing the same display patterns, the display patterns may remain on the screen as ghost images and a slight contrast irregularity may also appear. A normal operating status can be regained by suspending use for some time. It should be noted that this phenomenon does not adversely affect performance reliability.

To minimize the performance degradation of the LCD modules resulting from destruction caused by static electricity etc., exercise care to avoid holding the following sections when handling the modules.

- Exposed area of the printed circuit board.
- Terminal electrode sections.

10. USING LCD MODULES

Liquid Crystal Display Modules

LCD is composed of glass and polarizer. Pay attention to the following items when handling.

(1) Please keep the temperature within specified range for use and storage. Polarization degradation, bubble generation or polarizer peel-off may occur with high temperature and high humidity.

(2) Do not touch, push or rub the exposed polarizers with anything harder than an HB pencil lead (glass, tweezers, etc.).

(3) N-hexane is recommended for cleaning the adhesives used to attach front/rear polarizers and reflectors made of organic substances which will be damaged by chemicals such as acetone, toluene, ethanol and isopropylalcohol.

(4) When the display surface becomes dusty, wipe gently with absorbent cotton or other soft material like chamois soaked in petroleum benzin. Do not scrub hard to avoid damaging the display surface.

(5) Wipe off saliva or water drops immediately, contact with water over a long period of time may cause deformation or color fading.

(6) Avoid contacting oil and fats.

(7) Condensation on the surface and contact with terminals due to cold will damage, stain or dirty the polarizers. After products are tested at low temperature they must be warmed up in a container before coming is contacting with room temperature air.

(8) Do not put or attach anything on the display area to avoid leaving marks on.

(9) Do not touch the display with bare hands. This will stain the display area and degradate insulation between terminals (some cosmetics are determinated to the polarizers).

(10) As glass is fragile. It tends to become or chipped during handling especially on the edges. Please avoid dropping or jarring.

Installing LCD Modules

The hole in the printed circuit board is used to fix LCM as shown in the picture below. Attend to the following items when installing the LCM.

(1) Cover the surface with a transparent protective plate to protect the polarizer and LC cell.

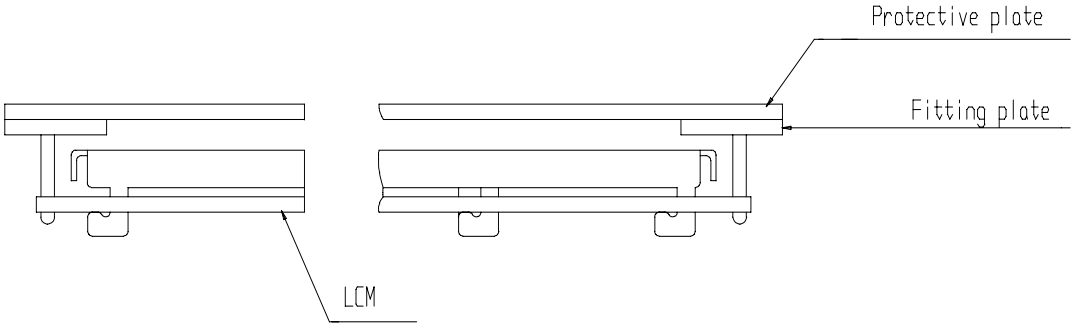

(2) When assembling the LCM into other equipment, the spacer to the bit between the LCM and the fitting plate should have enough height to avoid causing stress to the module surface, refer to the individual specifications for measurements. The measurement tolerance should be ±0.1mm.

Precaution for Handing LCD Modules

Since LCM has been assembled and adjusted with a high degree of precision, avoid applying excessive shocks to the module or making any alterations or modifications to it.

(1) Do not alter, modify or change the shape of the tab on the metal frame.

(2) Do not make extra holes on the printed circuit board, modify its shape or change the positions of components to be attached.

(3) Do not damage or modify the pattern writing on the printed circuit board.

(4) Absolutely do not modify the zebra rubber strip (conductive rubber) or heat seal connector.

(5) Except for soldering the interface, do not make any alterations or modifications with a soldering iron.

(6) Do not drop, bend or twist LCM.

(7) In order to avoid the cracking of the FPC, you should to pay attention to the area of FPC (R50mm) where the FPC was bent .the edge of coverlay ; the area of surface of Ni-Au plating, the area of soldering land, the area of through hole.

Electro-Static Discharge Control

Since this module uses a CMOS LSI, the same careful attention should be paid to electrostatic discharge as for an ordinary CMOS IC.

(1) Make certain that you are grounded when handing LCM.

(2) Before remove LCM from its packing case or incorporating it into a set, be sure the module and your body have the same electric potential.

(3) When soldering the terminal of LCM, make certain the AC power source for the soldering iron does not leak.

(4) When using an electric screwdriver to attach LCM, the screwdriver should be of ground potentiality to minimize as much as possible any transmission of electromagnetic waves produced sparks coming from the commutator of the motor.

(5) As far as possible make the electric potential of your work clothes and that of the work bench the ground potential.

(6) To reduce the generation of static electricity be careful that the air in the work is not too dried. A relative humidity of 50%-60% is recommended.

Precaution for soldering to the LCM

(1) Observe the following when soldering lead wire, connector cable and etc. to the LCM.

- Soldering iron temperature : 260°C ± 10°C.
- Soldering time : 3-4 sec.
- Solder : eutectic solder.

If soldering flux is used, be sure to remove any remaining flux after finishing to soldering operation. (This does not apply in the case of a non-halogen type of flux.) It is recommended that you protect the LCD surface with a cover during soldering to prevent any damage dur to flux spatters.

(2) When soldering the electroluminescent panel and PC board, the panel and board should not be detached more than three times. This maximum number is determined by the temperature and time conditions mentioned above, though there may be some variance depending on the temperature of the soldering iron.

(3) When remove the electoluminescent panel from the PC board, be sure the solder has completely melted, the soldered pad on the PC board could be damaged.

(4)Soldering iron is not allowed to touch the surface of FPC's cover film directly.

Precautions for Operation

(1) Viewing angle varies with the change of liquid crystal driving voltage (VO). Adjust VO to show the best contrast.

(2) Driving the LCD in the voltage above the limit shortens its life.

(3) Response time is greatly delayed at temperature below the operating temperature range. However, this does not mean the LCD will be out of the order. It will recover when it returns to the specified temperature range.

(4) If the display area is pushed hard during operation, the display will become abnormal. However, it will return to normal if it is turned off and then back on.

(5) Condensation on terminals can cause an electrochemical reaction disrupting the terminal circuit. Therefore, it must be used under the relative condition of 40°C , 50% RH.

(6) When turning the power on, input each signal after the positive/negative voltage becomes stable.

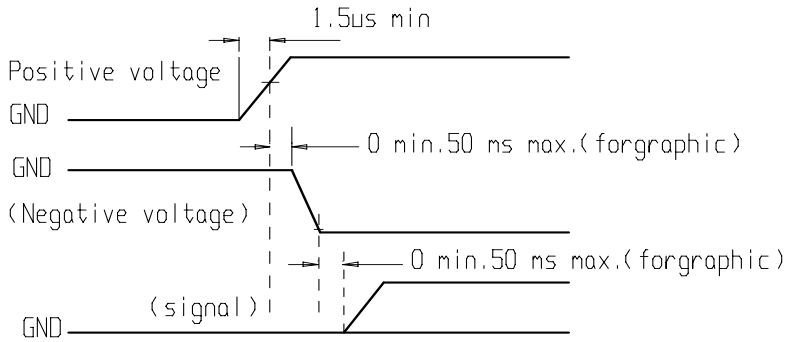

Storage

When storing LCDs as spares for some years, the following precaution are necessary.

(1) Store them in a sealed polyethylene bag. If properly sealed, there is no need for dessicant.

(2) Store them in a dark place. Do not expose to sunlight or fluorescent light, keep the temperature between 0°C and 35°C.

(3) The polarizer surface should not come in contact with any other objects. (We advise you to store them in the container in which they were shipped.)

(4) Environmental conditions :

- Do not leave them for more than 160hrs. at 70°C.

- Should not be left for more than 48hrs. at -20°C.

Safety

(1) It is recommended to crush damaged or unnecessary LCDs into pieces and wash them off with solvents such as acetone and ethanol, which should later be burned.

(2) If any liquid leakes out of a damaged glass cell and comes in contact with the hands, wash off thoroughly with soap and water.

Limited Warranty

Unless agreed between EAST and customer, EAST will replace or repair any of its LCD modules which are found to be functionally defective when inspected in accordance with EAST LCD acceptance standards (copies available upon request) for a period of one year from date of shipments. Cosmetic/visual defects must be returned to EAST within 90 days of shipment. Confirmation of such date shall be based on freight documents. The warranty liability of EAST limited to repair and/or replacement on the terms set forth above. EAST will not be responsible for any subsequent or consequential events.

Return LCM under warranty

No warranty can be granted if the precautions stated above have been disregarded. The typical examples of violations are :

- Broken LCD glass.
- PCB eyelet's damaged or modified.
- PCB conductors damaged.
- Circuit modified in any way, including addition of components.
- PCB tampered with by grinding, engraving or painting varnish.
- soldering to or modifying the bezel in any manner.

Module repairs will be invoiced to the customer upon mutual agreement. Modules must be returned with sufficient description of the failures or defects. Any connectors or cable installed by the customer must be removed completely without damaging the PCB's eyelet, conductors and terminals.