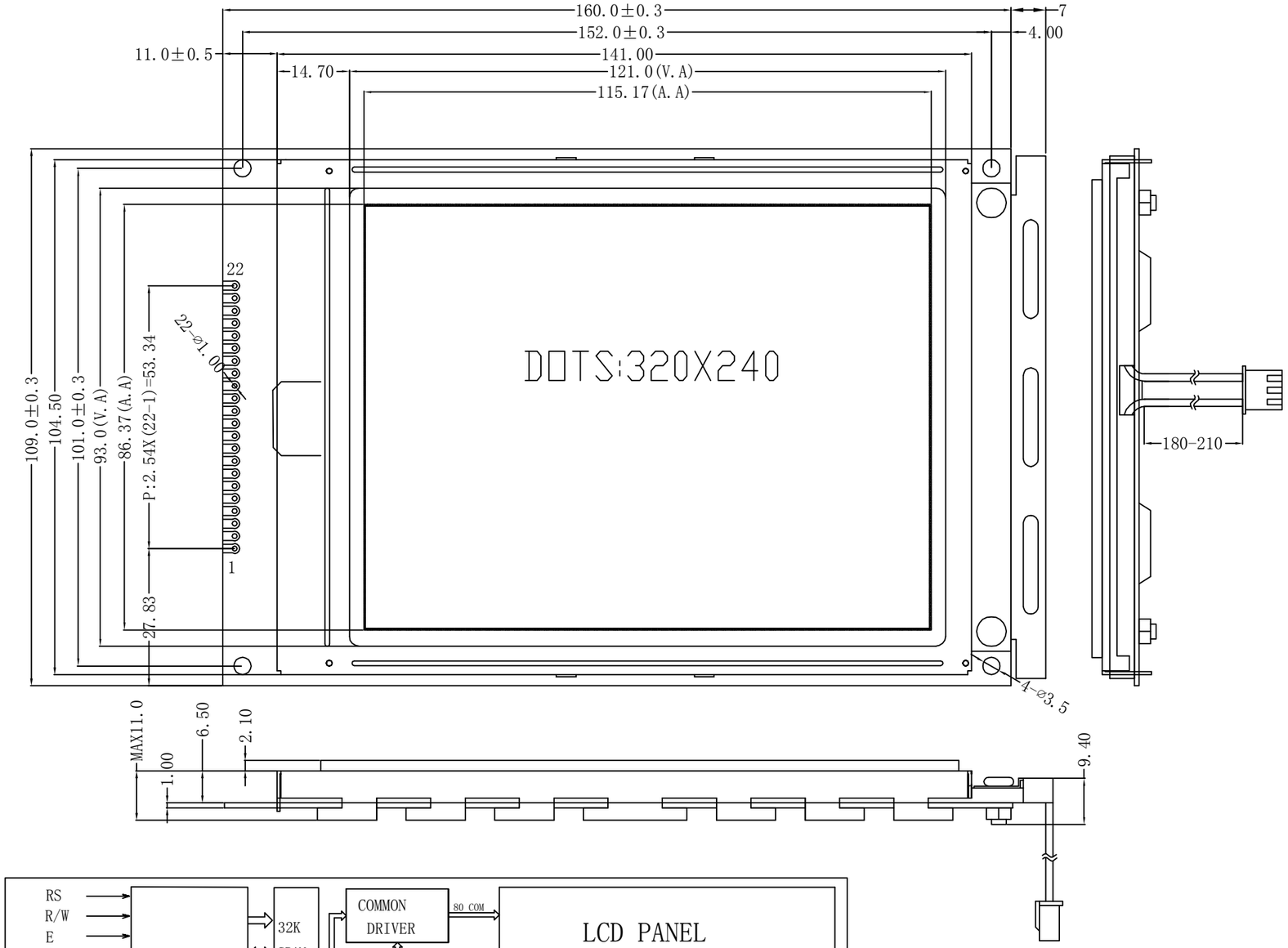

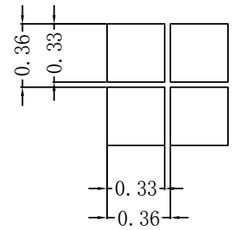

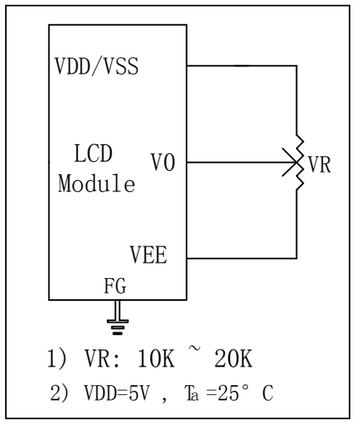

PIN	Symbol	Description
1	VSS	GND.
2	VDD	Power supply for logic.
3	V0	Operating voltage for LCD.
4	RS	Command and data write signal .
5	R/W	Read/Write selection.
6	E	Enable signal for LCM.
7	/CS1	Chip selection1
8	CS2	Chip selection2
9	BUSY	Busy sighal.
10	INT	Interrupt signal.
11	/RST	Reset signal.
12-19	DB0-DB7	Data bus.
20	VEE	Negative voltage output.
21、22	NC	--

ABSOLUTE MAXIMUM RATING					
Item	Symbol	Min	Type	Max	Unit
Supply voltage logic	VDD	4.8	5.0	5.2	V
LCD Operating Voltage	VDD-V0	-	20	23	V
LED Voltage	V_{LED}	4.8	5.0	5.2	V
LED Current	I_{LED}	-	150	160	mA

Description
1.DISPLAY TYPE: STN/Negative Blue; (STN/Positive, Yellow-Green).
2.Viewing Direction: 6 O'CLOCK ; (12 O'CLOCK).
3.Polarizer Mode: Transmistive ; (Transflective ; Reflective).
4.Color of Backlight: Whilte ; (Yellow/Green) .
5. Operating voltage option : 5V .
6.Operating Temp: -20° ~ 70° C.
7.Storage Temp: -30° ~ 80° C.

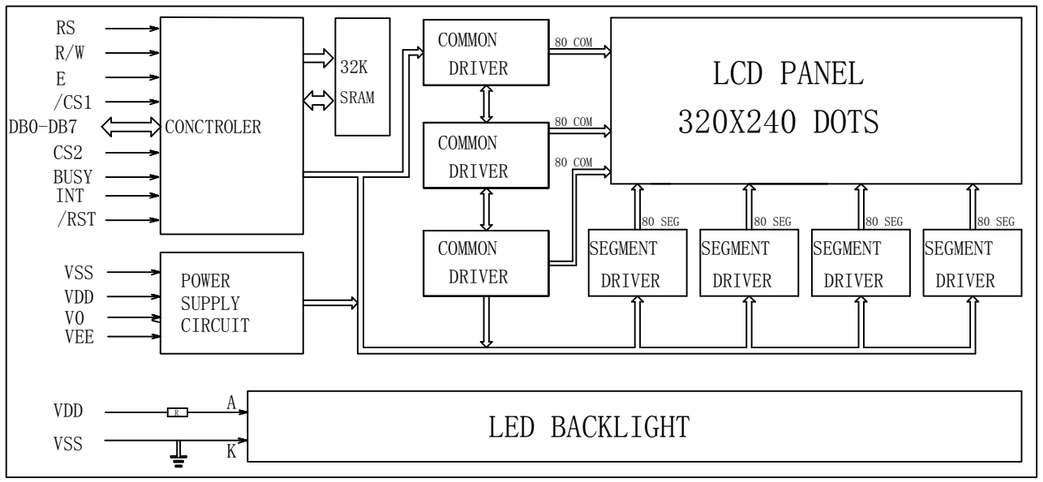

REVISION RECORD		DATE	HTTP://www.eastet.com	SHENZHEN ET TECHNOLOGY CO.,LTD. E-mail: east@eastet.com				
A	FIRST ISSUE		TITLE: LCM OUTLINE DIMENSION				GEN.TOL.: ±0.2	
B			Model No.: ET-G320240DV1				PRO.(3):	
C			Part No.: SPEC-ET-G320240DV1				VER.:	A
D			DRAWN	OY	DATE	2011.06.07	SHEET:	1/1
E			CHECKED		DATE		UNIT:	mm
F			APPROVED		DATE		SCALE:	1:1