由 Autodesk 教育版产品制作

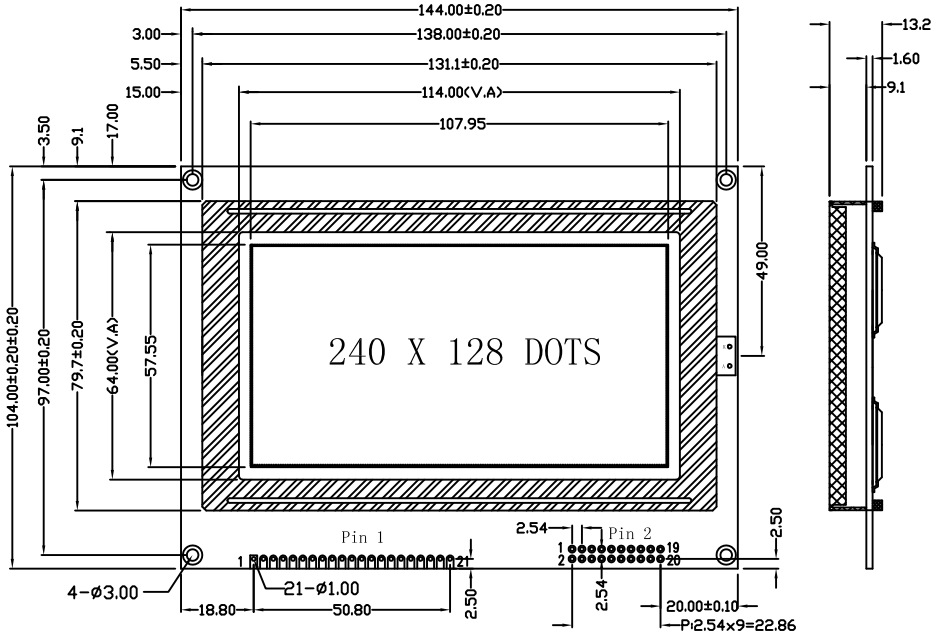

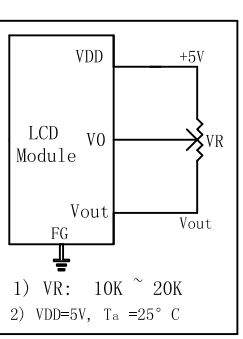

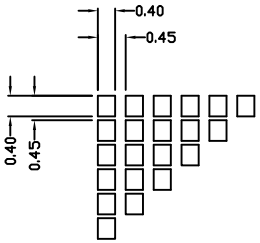

Pin 1	Symbol	Description
1	FG	Frame Ground.
2	VSS	GND.
3	VDD	Power supply for logic and LCD.
4	V0	Operating voltage for LCD.
5	/WR	Command and data write signal .
6	/RD	Data and status read signal.
7	/CE	Chip enable signal.
8	C/D	Command / Data selection.
9	/RST	Reset signal(Low effective).
10-17	DB0-DB7	Data bus.
18	FS	Selection of font H: 6 X 8 L: 8 X 8.
19	A	Backlight anode (+5V).
20	K	Backlight cathode(0V).
21	VOUT	Negative voltage output.

Pin 2	Symbol	Description
1	VSS	GND.
2	VDD	Power supply for logic and LCD.
3	V0	Operating voltage for LCD.
4	/WR	Command and data write signal .
5	/RD	Data and status read signal.
6	/CE	Chip enable signal.
7	C/D	Command / Data selection.
8	/RST	Reset signal
9-16	DB0-DB7	Data bus. (Low effective).
17	FS	Selection of font H: 6 X 8 L: 8 X 8.
18	VOUT	Negative voltage output.
19	A	Backlight anode(+5V).
20	K	Backlight cathode.

ABSOLUTE MAXIMUM RATING

Item	Symbol	Min	Type	Max	Unit
Supply voltage logic	VDD	4.8	5.0	5.2	V
LCD Operating Voltage	VDD-V0	-	14.5	19.0	V
LED Voltage	V_{LED}	4.8	5.0	5.2	V
LED Current (Side LED)	I_{LED}	-	190	200	mA

Description
1.DISPLAY TYPE: STN /Negative Blue; (STN / Positive , Yellow-Green).
2.Viewing Direction: 6 O'CLOCK ; (12 O'CLOCK).
3.Polarizer Mode: Transitive ; (Transflective ; Reflective).
4.Color of Backlight: White ; (Yellow/Green) .
5. Operating voltage option : 5V .
6.Operating Temp: -20° ~ 70° C.
7.Storage Temp: -30° ~ 80° C.

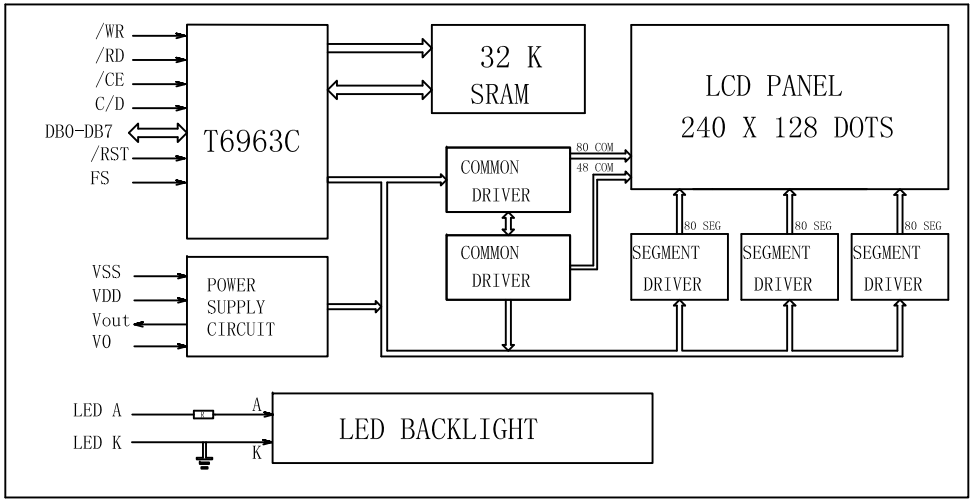

REVISION RECORD		DATE		SHENZHEN ET TECHNOLOGY CO.,LTD. HTTP:// www.eastet.com E-mail: east@eastet.com			
1				TITLE: LCM OUTLINE DIMENSION			GEN.TOL.: ±0.2
2				Model No.: ET-G240128AV8			PRO.(3):
3				Part No.: SPEC-ET-G240128AV8			VER.: A
4				DRAWN OY	DATE	2011.06.09	SHEET: 1/1
5				CHECKED	DATE		UNIT: mm
6				APPROVED	DATE		SCALE: 1:1

由 Autodesk 教育版产品制作