由 Autodesk 教育版产品制作

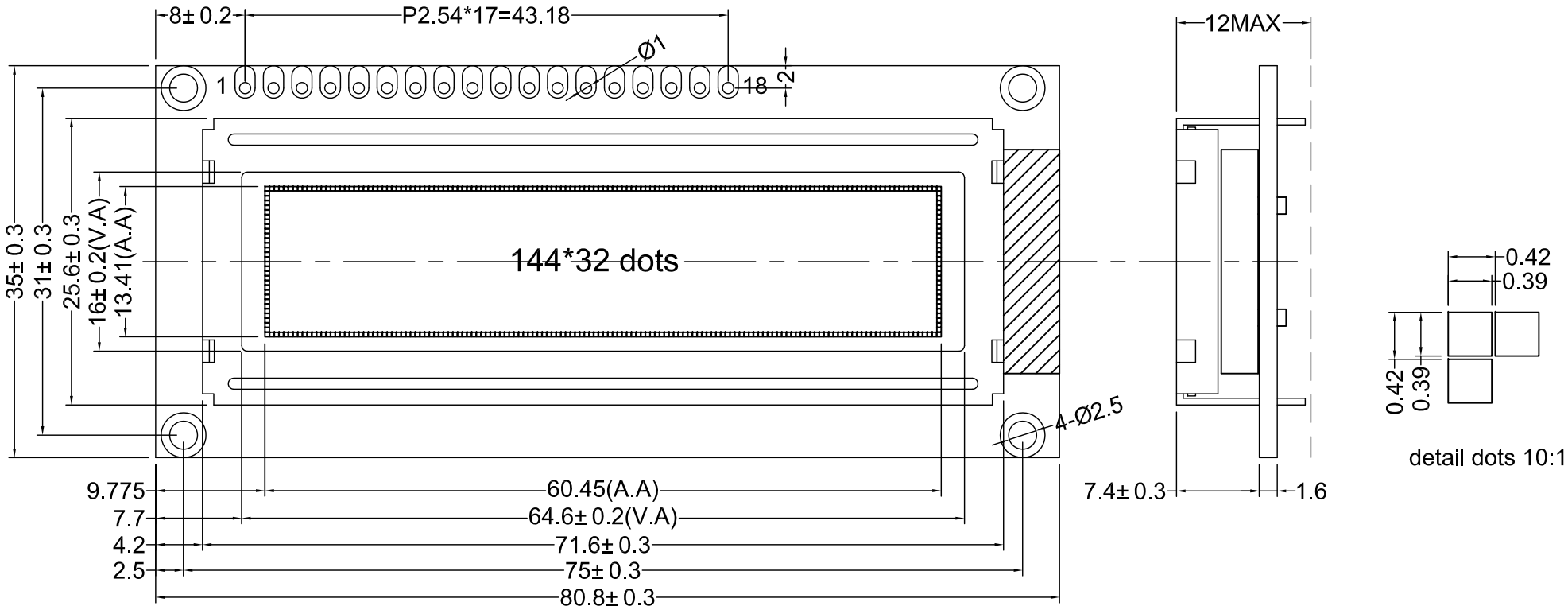

Pin.No	Symbol	Description
1	VSS	GND.
2	VDD	Power supply for logic and LCD.
3	V0(NC)	Operating voltage for LCD.
4	RS(CS)	Data / instruction select.
5	R/W(SID)	Read / write select.
6	E(SCLK)	Enable signal.
7-14	DB0–DB7	Data bus.
15	BLA	Backlight anode (+5V).
16	VOUT(NC)	Negative voltage output.
17	PSB	H:Parallel Mode; L:Serial Mode
18	/RST	Reset signal (Low effective) .

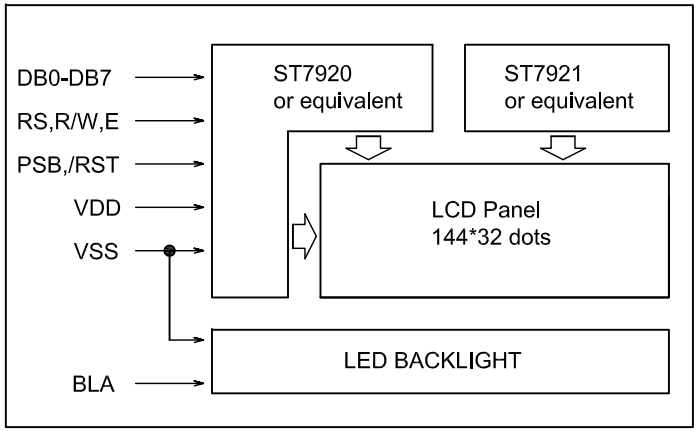

Description
1.DISPLAY TYPE: STN-Gray
2.Viewing Direction: 6 O'CLOCK
3.Polarizer Mode: Positive,Transmissive
4.Color of Backlight: LED White
5. Operating voltage option : 5V .
6.Operating Temp: -20° ~ 70° C.
7.Storage Temp: -30° ~ 80° C.
8.Drive Method:1/32duty,1/5bias

ABSOLUTE MAXIMUM RATING					
Item	Symbol	Min	Type	Max	Unit
Supply voltage logic	VDD	4.8	5.0	5.2	V
LCD Operating Voltage	VDD-V0	-	5.0	-	V
LED Voltage	V_{LED}	4.8	5.0	5.2	V
LED Current	I_{LED}	-	30	-	mA

REVISION RECORD		DATE	HTTP:// www.eastet.com	SHENZHEN ET TECHNOLOGY CO.,LTD. E-mail: east@eastet.com			
A	First Issue		TITLE: LCM OUTLINE DIMENSION			GEN.TOL.: ±0.2	
B			Model No.: ET-G14432AV2			PRO.(3):	
C			Part No.: SPEC-ET-G14432AV2			VER.:	A
D			DRAWN	OY	DATE 2011.08.29	SHEET:	1/1
E			CHECKED		DATE	UNIT:	mm
F			APPROVED		DATE	SCALE:	1:1

由 Autodesk 教育版产品制作