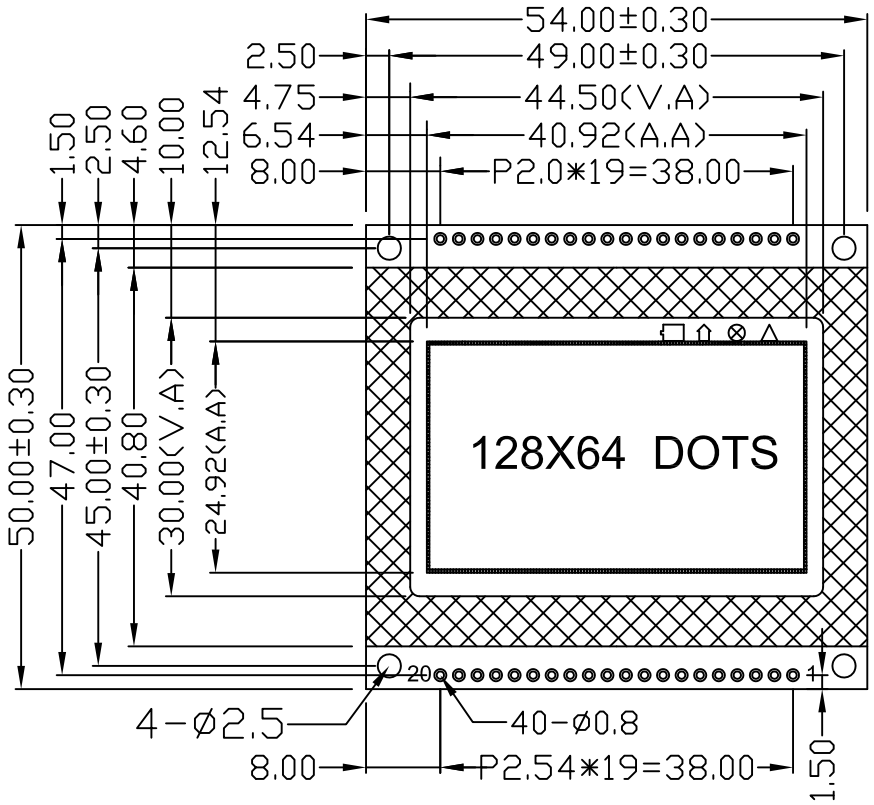

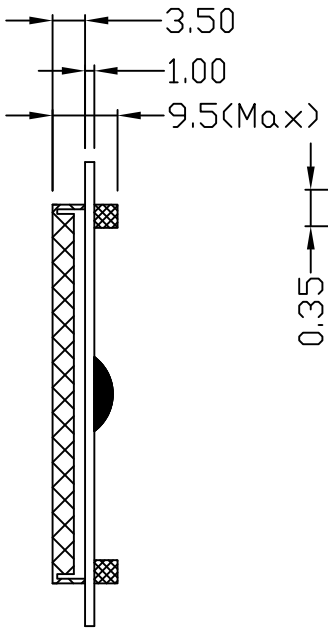

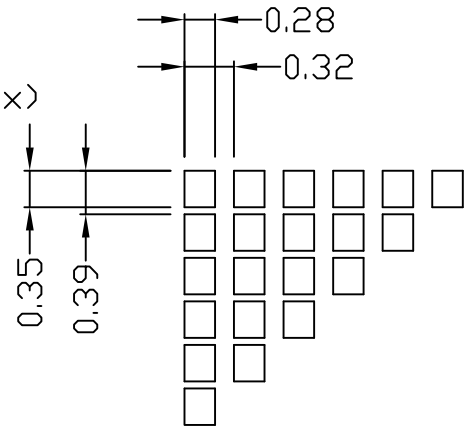

Pin.No	Symbol	Description
1	VSS	GND.
2	VDD	Power supply for logic and LCD.
3	V0	Operating voltage for LCD.
4	RS	Data / instruction select.
5	R/W	Read / write select.
6	E	Enable signal.
7-14	DB0-DB7	Data bus.
15	CS1	Chip select of U1 (High effective).
16	CS2	Chip select of U2 (High effective).
17	/RST	Reset signal (Low effective) .
18	Vout	Negative voltage output.
19	LED A	Backlight anode(+5V).
20	LED K	Backlight cathode(+0V).

ABSOLUTE MAXIMUM RATING					
Item	Symbol	Min	Type	Max	Unit
Supply voltage logic	VDD	4.7	5.0	5.2	V
LCD Operating Voltage	VDD-V0	-	9.7	13.85	V
LED Voltage	V_{LED}	4.8	5.0	5.2	V
LED Current	I_{LED}	-	25	30	mA

Description
1.DISPLAY TYPE: STN /Negative Blue; (STN / Positive , Yellow-Green).
2.Viewing Direction: 6 O'CLOCK ; (12 O'CLOCK).
3.Polarizer Mode: Transmissive ; (Transflective ; Reflective).
4.Color of Backlight: Yellow/Green (White) .
5. Operating voltage option : 5V .
6.Operating Temp: -20° ~ 70° C.
7.Storage Temp: -30° ~ 80° C.

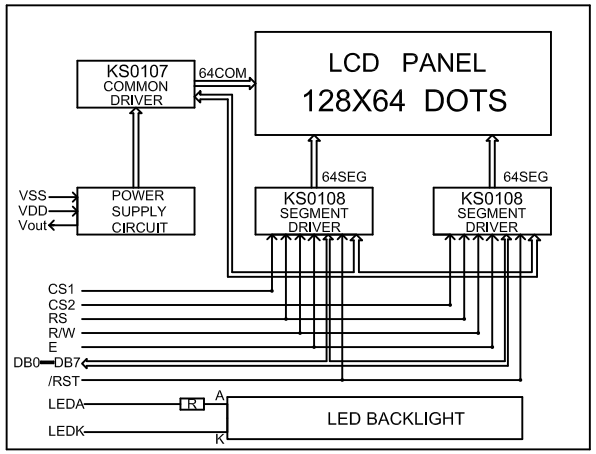

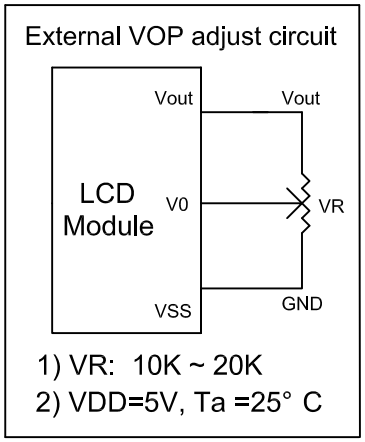

REVISION RECORD		DATE		SHENZHEN ET TECHNOLOGY CO.,LTD. E-mail: east@eastet.com			
1			TITLE: LCM OUTLINE DIMENSION			GEN.TOL.: ±0.2	
2			Model No.: ET-G12864EV1			PRO.(3):	
3			Part No.: SPEC-ET-G12864EV1			VER.:	A
4			DRAWN	OY	DATE 2011.06.24	SHEET:	1/1
5			CHECKED		DATE	UNIT:	mm
6			APPROVED		DATE	SCALE:	1:1