由 Autodesk 教育版产品制作

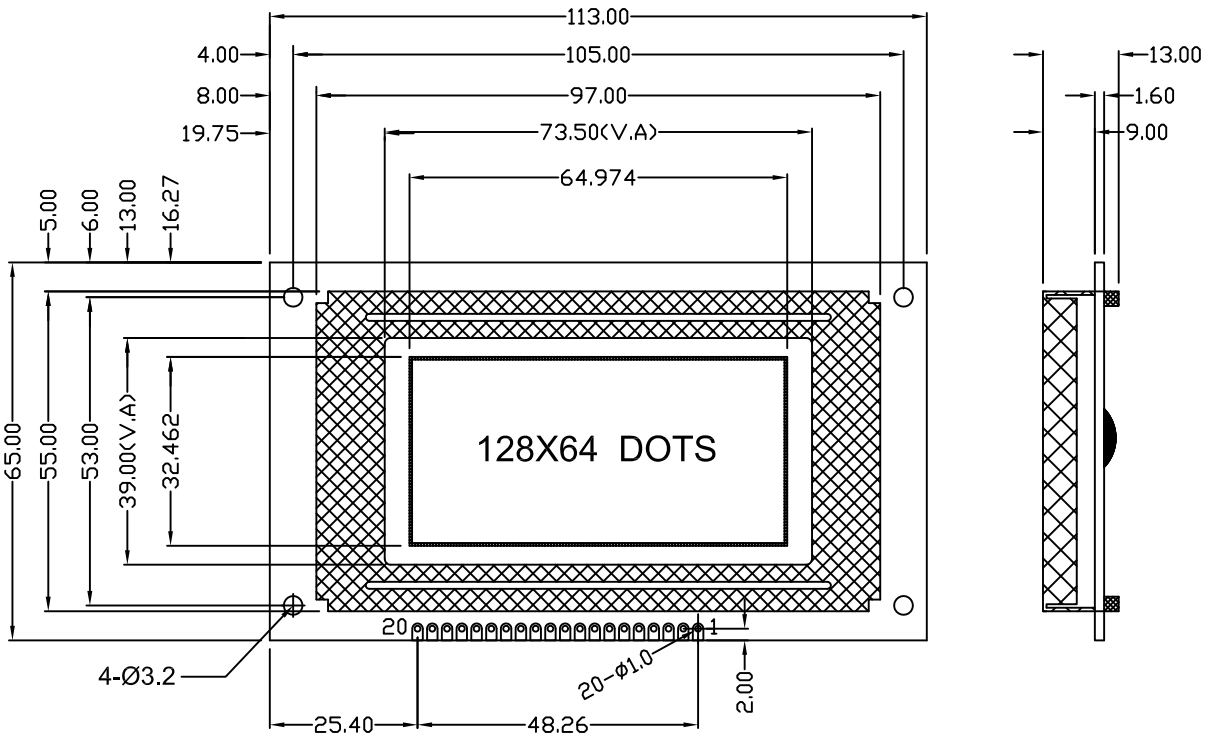

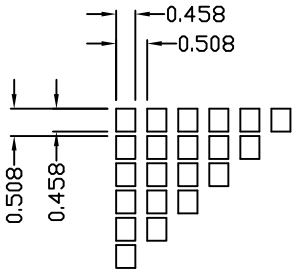

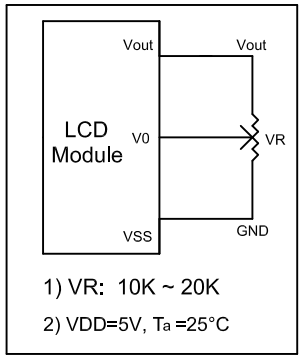

Pin.No	Symbol	Description
1	VSS	GND.
2	VDD	Power supply for logic and LCD.
3	V0	Operating voltage for LCD.
4	RS	Data / instruction select.
5	R/W	Read / write select.
6	E	Enable signal.
7-14	DB0–DB7	Data bus.
15	CS1	Chip select of IC1 (High effective).
16	CS2	Chip select of IC2 (High effective).
17	/RST	Reset signal (Low effective) .
18	Vout	Negative voltage output.
19	LEDA	Backlight anode (+5V).
20	LEDK	Backlight cathode (+0V).

ABSOLUTE MAXIMUM RATING					
Item	Symbol	Min	Type	Max	Unit
Supply voltage logic	VDD	4.7	5.0	5.2	V
LCD Operating Voltage	VDD-V0	11.8	12.5	13.85	V
LED Voltage	V_{LED}	4.8	5.0	5.2	V
LED Current (Side LED)	I_{LED}	60	70	80	mA

Description
1.DISPLAY TYPE: STN /Negative Blue; (STN / Positive , Yellow-Green).
2.Viewing Direction: 6 O'CLOCK ; (12 O'CLOCK).
3.Polarizer Mode: Transitive ; (Transflective ; Reflective).
4.Color of Backlight: White ; (Yellow/Green) .
5. Operating voltage option : 5V .
6.Operating Temp: -20° ~ 70°C.
7.Storage Temp: -30° ~ 80°C.

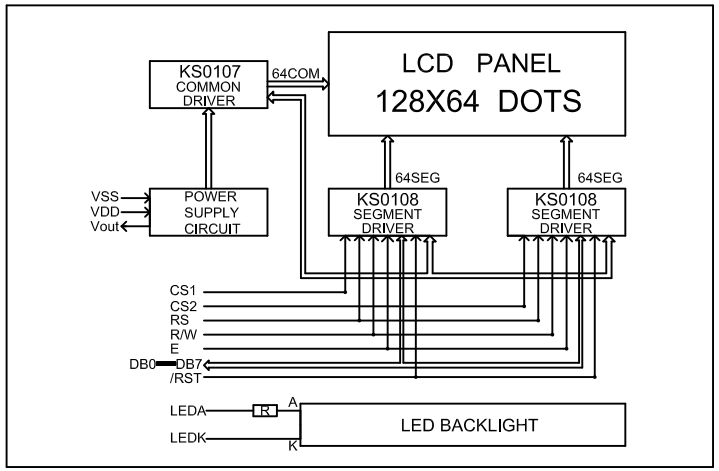

REVISION RECORD		DATE	HTTP:// www.eastet.com			SHENZHEN ET TECHNOLOGY CO.,LTD. E-mail: east@eastet.com	
A	First issue		TITLE: LCM OUTLINE DIMENSION			GEN.TOL.: ±0.2	
B			Model No.: ET-G12864AV1			PRO.(3):	
C			Part No.: SPEC-ET-G12864AV1			VER.:	A
D			DRAWN	oy	DATE 2011.06.23	SHEET:	1/1
E			CHECKED		DATE	UNIT:	mm
F			APPROVED		DATE	SCALE:	1:1

由 Autodesk 教育版产品制作