由 Autodesk 教育版产品制作

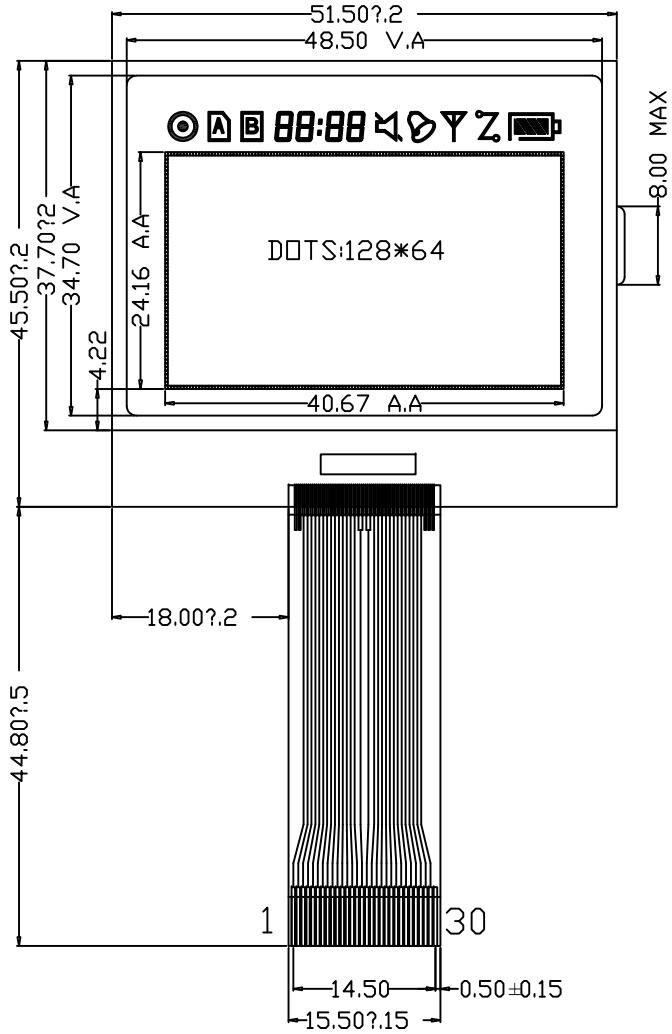

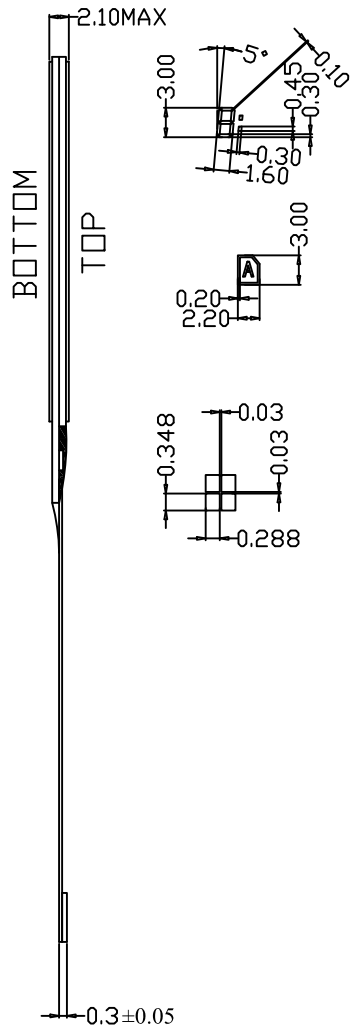

Pin.No	Symbol	Description
1	INTRS	H:using built_in reistors, L:not using_in reistors.
2	C68	H:6800-series MPU interface ,L:8080-series MPU interface
3	VR	Vo voltage adjustment pin which is valid only .when on-chip resistors are not used (INTRS)
4	V0	LCD driver supply voltages
5	V4	LCD driver supply voltages
6	V3	LCD driver supply voltages
7	V2	LCD driver supply voltages
8	V1	LCD driver supply voltages
9	C2+	Capacitor 2 positive connection pin for voltage converter
10	C2-	Capacitor 2 positive connection pin for voltage converter
11	C1+	Capacitor 1 positive connection pin for voltage converter
12	C1-	Capacitor 1 positive connection pin for voltage converter
13	C3+	Capacitor 3 positive connection pin for voltage converter
14	VOUT	Voltage converter output
15	VSS	GND.
16	VDD	Power supply for logic and LCD.
17-24	DB7-DB0	Data bus.
25	E	Chip enable signal
26	R/W	H: Read mode, L: Write mode
27	RS	H: DB<0:7> Display RAM Data, L: DB<0:7> Instruction Data
28	/RST	Reset signal (Low effective) .
29	/CS	Chip select input
30	NC	——

Description
1.DISPLAY TYPE: STN(B/W) / Positive .
2.Viewing Direction: (6 O'CLOCK) .
3.Polarizer Mode: Transmissive .
4.Color of Backlight: No
5. Operating voltage option : 3 V .
6.Operating Temp: -20° ~ 70°C.
7.Storage Temp: -30° ~ 80C.

REVISION RECORD		DATE	HTTP:// www.eastet.com			SHENZHEN ET TECHNOLOGY CO.,LTD. E-mail: east@eastet.com	
A	First issue		TITLE: LCM OUTLINE DIMENSION			GEN.TOL.: ±0.2	
B			Model No.: ET-G12864-1			PRO.(3):	
C			Part No.: SPEC-ET-G12864-1			VER.:	A
D			DRAWN	OY	DATE 2011.06.21	SHEET:	1/1
E			CHECKED		DATE	UNIT:	mm
F			APPROVED		DATE	SCALE:	1:1

由 Autodesk 教育版产品制作